AS 1720.5:2015

Australian STANDARD

Timber structures

Part 5: Nailplated timber roof trusses

STANDARDS Australia

Accessed by TAFE NSW (TAFE Library Services) on 01 May 2017 (Document currency not guaranteed when printed)

This Australian Standard® was prepared by Committee TM-010, Timber Structures and Framing. It was approved on behalf of the Council of Standards Australia on 31 July 2015. This Standard was published on 18 August 2015.

The following are represented on Committee TM-010:

- Australian Building Codes Board
- Australian Forest Products Association
- Australian Institute of Building
- Building Research Association of New Zealand
- Engineered Wood Products Association of Australasia
- Engineers Australia
- Forest and Wood Products Australia
- Frame and Truss Manufacturers Association Australia
- Glued Laminated Timber Association of Australia
- Housing Industry Association
- Housing SA
- James Cook University
- Master Builders Australia
- New Zealand Timber Industry Federation
- Timber Development Association, NSW
- Timber Queensland
- University of Technology, Sydney
- Wood Processors and Manufacturers Association of New Zealand

This Standard was issued in draft form for comment as DR AS 1720.5:2015.

Standards Australia wishes to acknowledge the participation of the expert individuals that contributed to the development of this Standard through their representation on the Committee and through the public comment period.

Keeping Standards up-to-date

Australian Standards® are living documents that reflect progress in science, technology and systems. To maintain their currency, all Standards are periodically reviewed, and new editions are published. Between editions, amendments may be issued.

Standards may also be withdrawn. It is important that readers assure themselves they are using a current Standard, which should include any amendments that may have been published since the Standard was published.

Detailed information about Australian Standards, drafts, amendments and new projects can be found by visiting www.standards.org.au

Standards Australia welcomes suggestions for improvements, and encourages readers to notify us immediately of any apparent inaccuracies or ambiguities. Contact us via email at mail@standards.org.au, or write to Standards Australia, GPO Box 476, Sydney, NSW 2001.

Accessed by TAFE NSW (TAFE Library Services) on 01 May 2017 (Document currency not guaranteed when printed)

Australian Standard®

Timber structures

Part 5: Nailplated timber roof trusses

First published as AS 1720.5:2015.

COPYRIGHT

© Standards Australia Limited

All rights are reserved. No part of this work may be reproduced or copied in any form or by any means, electronic or mechanical, including photocopying, without the written permission of the publisher, unless otherwise permitted under the Copyright Act 1968.

Published by SAI Global Limited under licence from Standards Australia Limited, GPO Box 476, Sydney, NSW 2001, Australia

ISBN 978 1 76035 200 4

Accessed by TAFE NSW (TAFE Library Services) on 01 May 2017 (Document currency not guaranteed when printed)

PREFACE

This Standard was prepared by the Australian members of the Joint Standards Australia/Standards New Zealand Committee TM-010, Timber Structures and Framing.

After consultation with stakeholders in both countries, Standards Australia and Standards New Zealand decided to develop this Standard as an Australian Standard rather than an Australian/New Zealand Standard.

The objective of this Standard is to provide a performance-based document for the design of nailplated timber roof trusses for residential and similar building applications in accordance with AS 1720.1, AS 4055 and the AS(/NZS) 1170 series. Guidance is provided as necessary for the interpretation of these Standards specifically for roof truss design within defined building parameters. Some prescriptive information is included for effective application of the Standard.

Statements expressed in mandatory terms in notes to tables are deemed to be requirements of this Standard.

The terms ‘normative’ and ‘informative’ have been used in this Standard to define the application of the appendix to which they apply. A normative appendix is an integral part of a Standard, whereas an informative appendix is for information and guidance only.

Accessed by TAFE NSW (TAFE Library Services) on 01 May 2017 (Document currency not guaranteed when printed)

CONTENTS

Page

FOREWORD 4

SECTION 1 SCOPE AND GENERAL
1.1 SCOPE 5
1.2 APPLICATION 5
1.3 NORMATIVE REFERENCES 5
1.4 NOTATION 6
1.5 DEFINITIONS 6
1.6 GENERAL REQUIREMENTS 9
1.7 BASIS FOR DESIGN 9
1.8 OTHER METHODS 9

SECTION 2 DESIGN CONSIDERATIONS
2.1 PERFORMANCE 10
2.2 DESIGN METHODS 10
2.3 DOCUMENTATION 10
2.4 MATERIALS 11
2.5 LOADS 12

SECTION 3 DESIGN METHODS
3.1 STRUCTURAL MODELS 14
3.2 CRITICAL DESIGN ACTION EFFECTS 14
3.3 CAPACITY FACTOR 14
3.4 STRENGTH LIMIT STATES 15
3.5 STABILITY LIMIT STATES 20
3.6 SERVICEABILITY LIMIT STATES 20

SECTION 4 MEMBER DESIGN
4.1 GENERAL 22
4.2 DESIGN FOR SAFETY 22
4.3 DESIGN FOR SERVICEABILITY 27

SECTION 5 JOINT DESIGN
5.1 GENERAL 29
5.2 STRENGTH LIMIT STATES 29

APPENDICES
A NOMENCLATURE 36
B OTHER DESIGN CONSIDERATIONS 44
C COMMONLY USED STRUCTURAL MODELS 51
D TRUSS OVERHANG DESIGN METHOD 53

BIBLIOGRAPHY 57

Accessed by TAFE NSW (TAFE Library Services) on 01 May 2017 (Document currency not guaranteed when printed)

FOREWORD

The design of nailplated timber roof trusses in Australia has evolved over the past 50 years, from simplified manual procedures encompassing standard designs, to the sophisticated computer design packages of today, which are used to individually design each truss within a roof system.

Over this period, methods of design, fabrication and construction, drawn from research, experience and reference to various Australian and international Standards, have been developed to suit the form and style of Australian buildings. This Standard is the result of a collaborative effort to document a common uniform method of designing nailplated timber roof trusses in Australia.

The methodology, design and performance criteria outlined in this Standard are suitable for preparing and checking the designs of nailplated timber roof trusses in residential and similar building applications in Australia. Additional information, such as the structural properties of proprietary nailplates, may be obtained from the supplier.

Accessed by TAFE NSW (TAFE Library Services) on 01 May 2017 (Document currency not guaranteed when printed)

STANDARDS AUSTRALIA

Australian Standard
Timber structures

Part 5: Nailplated timber roof trusses

SECTION 1 SCOPE AND GENERAL

1.1 SCOPE

This Standard sets out design considerations and methods for nailplated timber roof trusses for residential and other buildings within the following limitations:

(a) Residential structures, light commercial structures, and non-habitable structures.

(b) Maximum roof pitch of 45°.

(c) Maximum truss span of 16 m.

(d) Maximum truss spacing of 1200 mm.

1.2 APPLICATION

This Standard shall be used in conjunction with AS 1720.1, AS 4055 (where appropriate) and the AS(/NZS) 1170 series.

NOTES:

1 The design requirements and criteria contained herein provide a basis for the design of nailplated timber roof trusses to meet the structural safety and serviceability performance requirements of the NCC for the building types within the general limitations given in Clause 1.1.

2 This Standard may also be applied to the design and construction of other classes of buildings where the design criteria, loadings and other parameters applicable to those classes of building are within the limitations of this Standard.

3 Some parts of the scope of this Standard are beyond the scope of AS 1684 and AS 4773. In those circumstances, the supporting structure shall be designed from first principles according to their material standards.

1.3 NORMATIVE REFERENCES

The following are the normative documents referred to in this Standard:

NOTE: Documents referenced for informative purposes are listed in the Bibliography.

AS

1170 Structural design actions

1170.4 Part 4: Earthquake actions in Australia

1397 Continuous hot-dip metallic coated steel sheet and strip—Coatings of zinc and zinc alloyed with aluminium and magnesium

1649 Timber—Methods of test for mechanical fasteners and connectors—Basic working loads and characteristic strengths

Accessed by TAFE NSW (TAFE Library Services) on 01 May 2017 (Document currency not guaranteed when printed)

 © Standards Australia

AS
1684 Residential timber-framed construction
1684.2 Part 2: Non-cyclonic areas

1720 Timber structures
1720.1 Part 1: Design methods

4055 Wind loads for housing

4440 Installation of nailplated timber roof trusses

4446 Manufacture of nailplate-joined timber products

AS/NZS
1170 Structural design actions (series)
1170.0 Part 0: General principles
1170.1 Part 1: Permanent, imposed and other actions
1170.2 Part 2: Wind actions
1170.3 Part 3: Snow and ice actions

1.4 NOTATION

The following symbols are used in this Standard:

b = Breadth of member

d = Depth of member

G = Permanent action

L = Span

L_o = Horizontal span for overhang

Q = Imposed action

s = Spacing

W_u = Ultimate wind action

W_s = Serviceability wind action

W_{se} = Serviceability wind action—external

W_{si} = Serviceability wind action—internal

S_u = Ultimate snow action

S_s = Serviceability snow action

E_u = Ultimate earthquake action

1.5 DEFINITIONS

For the purpose of this Standard, the following definitions apply.

NOTE: Appendix A illustrates generic terms applying to roof trusses and roof truss systems, and typical roof truss shapes. It also describes key truss types in terms of function and loading.

1.5.1 Apex

The truss joint formed where two sloping top chords of a truss intersect, generally at the highest point of the truss.

1.5.2 Attic truss

A roof truss supporting both roof and a habitable or non-habitable storage floor space contained within.

Accessed by TAFE NSW (TAFE Library Services) on 01 May 2017 (Document currency not guaranteed when printed)

1.5.3 Bottom chord

A member forming the lower boundary of a truss and which generally supports a ceiling.

1.5.4 Camber

Upward vertical displacement built into the truss at truss panel points to compensate for long-term deflection due to anticipated permanent actions.

1.5.5 Cantilever

Part of a truss that extends beyond its outermost support, exclusive of the overhang.

1.5.6 Component

Hardware used in the manufacture and installation of roof trusses, including nailplates, bracing and other brackets and connections.

1.5.7 Cove truss

A truss supported at a point on the overhang, rather than the usual support at the heel, beyond the point where the bottom chord (or end-web) meets the top chord.

1.5.8 Girder truss

A roof truss that supports other trusses or structural members (e.g. beams).

1.5.9 Heel

The major truss joint formed where the sloping top chord meets the bottom chord. When this junction is used for the set out of the truss shape, it is also known as the pitching point.

1.5.10 Joint group

The classification assigned to a timber species or species group for the purpose of calculating joint capacity, as defined and applied in AS 1720.1.

1.5.11 Knee

The major truss joint formed where the sloping top chord meets the horizontal top chord of a truncated truss.

1.5.12 Lateral brace

An out-of-plane member connected to a chord or web of a truss and intended to resist out-of-plane buckling forces.

NOTE: Also known as a web brace, lateral tie, lateral restraint, chord tie or binder.

1.5.13 Member

A single structural element, including truss chords and webs.

1.5.14 Nailplate

A metal connector plate, with integral teeth, manufactured from structural quality steel protected with zinc coating, stainless steel or their equivalents and designed to transfer loads between different timber members at a joint.

1.5.15 Overhang

The outward extension of one truss chord (usually the top chord) beyond the other truss chord (usually the bottom chord), measured horizontally.

NOTES:

1 An external overhang refers to the part of the overhang outside of the outer wall.

2 Unless specifically noted otherwise, overhangs are considered external.

1.5.16 Panel length

The distance measured along a chord between adjacent panel points (nodes).

Accessed by TAFE NSW (TAFE Library Services) on 01 May 2017 (Document currency not guaranteed when printed)

1.5.17 Panel point

Point of intersection of two or more truss members, excluding mid-panel splices.

1.5.18 Pitch

Angle of a truss chord relative to the horizontal, expressed in degrees.

1.5.19 Ply

The number of trusses fixed together to form a single structural element.

1.5.20 Rise

The maximum vertical dimension of a truss (as measured), excluding overhangs, and typically from the underside of the bottom chord to the underside of the apex joint.

1.5.21 Roof truss

A truss designed to support roof loads and any combination of floor and ceiling loads as or if required.

NOTE: See Appendix A for examples of various shapes and types of roof trusses.

1.5.22 Sarking

A membrane acting as a water barrier, to collect and discharge any water that might penetrate a building.

1.5.23 Scab

A timber member that is mechanically laminated to one or both faces of a truss member.

1.5.24 Standard truss

A roof truss acting in parallel with other trusses, as a series, to support common roof and, where applicable, ceiling loads.

1.5.25 Structural fascia

A timber member of minimum rigidity 86×10^9 Nmm^2 fixed to the ends of overhangs and capable, via direct connections, of distributing concentrated imposed loads to adjacent trusses.

1.5.26 Structural fascia beam

A beam located along the eaves line, designed to support the overhang end of one or more otherwise insufficiently supported trusses and supported itself by the overhang end of two neighbouring trusses suitable for this purpose.

1.5.27 Tooth group

A classification assigned to a timber species or species group and associated timber stress grades for the purpose of calculating nailplate joint capacity.

NOTE: The term ‘tooth group’ is similar to the term ‘joint group’ used in AS 1720.1, but is specific to nailplate tooth shape. The nailplate supplier determines the design properties of a tooth group and assigns it to appropriate timber species and grades.

1.5.28 Top chord

Members forming the upper boundary of a truss and which generally support the roof battens or purlins.

1.5.29 Truss

An engineered, prefabricated structural framework designed to support any combination of roof, floor and ceiling loads.

NOTE: The joined truss members together form a rigid, plane, structural element and are, ideally, triangulated.

Accessed by TAFE NSW (TAFE Library Services) on 01 May 2017 (Document currency not guaranteed when printed)

1.5.30 Truss span

(a) Actual truss span: The overall horizontal distance across two adjacent load-bearing supports, typically measured from outside to outside of supporting plates.

(b) Nominal truss span: Horizontal distance measured between pitching points.

NOTE: These alternative definitions are sometimes used for specific applications.

1.5.31 Webs

Members of a truss used to join and hold apart the top and bottom chords, which usually form a triangular pattern that gives truss action and essentially carry tension or compression forces.

1.5.32 Wind truss

A parallel chord truss in the roof/ceiling plane fixed to the chords of a truss system to transfer lateral wind loads on the building to appropriate wall bracing elements.

1.5.33 Z-sprocket

An outrigger rafter with its backspan set down to pass beneath the top chord of a gable end truss.

NOTE: See Appendix A, Figure A1(c).

1.6 GENERAL REQUIREMENTS

Trusses shall be manufactured in accordance with AS 4446, and their installation, bracing and fixing shall be in accordance with AS 4440.

NOTE: Additional manufacturing or installation requirements, or any deviations from the requirements in these Standards, should be indicated in the documentation.

1.7 BASIS FOR DESIGN

For the purposes of this Standard, the supporting structure is assumed to be stable in its own right under all loading conditions.

NOTE: Either AS 4055 or AS/NZS 1170.2 may be used to determine wind loads where the structure complies with the geometric and other limitations of AS 4055. Otherwise, AS/NZS 1170.2 is applicable. The design gust wind speed may be derived from the AS 4055 wind classification system.

1.8 OTHER METHODS

This Standard does not preclude the use of other design considerations or methods, or any other means of demonstrating satisfactory safety and serviceability performance in accordance with the requirements of the Building Code of Australia.

Accessed by TAFE NSW (TAFE Library Services) on 01 May 2017 (Document currency not guaranteed when printed)

SECTION 2 DESIGN CONSIDERATIONS

2.1 PERFORMANCE

Timber roof trusses shall be designed to withstand combinations of loads and other actions as given in this Standard.

2.2 DESIGN METHODS

Design methods shall comply with AS 1720.1 except as otherwise stipulated in this Standard. Roof trusses shall be designed to resist the design action effects resulting from the appropriate combinations of actions in order to satisfy the requirements for safety (strength and stability) and serviceability limit states as specified in Sections 3 and 4 of this Standard.

2.3 DOCUMENTATION

2.3.1 Design

The design documentation shall include design, building or installation assumptions and corresponding limitations shall be noted and, where these limitations are exceeded, the circumstances requiring further design shall be specified. A description of the structural model/s and actions used as the basis of design shall be included and, where necessary, additional or alternative information shall be provided to address the following specific items:

(a) Design load parameters such as roof and ceiling materials, wind speed, solar hot water systems, mechanical services and support of any external structures.

(b) Roof framing plan showing the types and locations of all roof trusses, bracing, tie-down and buckling restraints.

(c) Details of bracing and buckling restraints including, for timber products, size, spacing and timber species and/or joint group and, for steel products, product or size and spacing information.

(d) Define any members or components additional to those in Item (b) that are expected to contribute to the bracing and/or buckling restraint system.

(e) Specification of all connectors and fixings to be used for the roof truss installation, including those for bracing, tie-down and buckling restraints.

(f) The stress grade, species and/or joint group and tooth group of the roof truss timber.

(g) Protective treatment for the timber and/or any special maintenance requirements.

(h) Nailplate identification and sizing details.

(i) Corrosion protection for nailplates and other fixings and/or any special maintenance requirements.

(j) The in-service moisture and temperature regime for which the roof truss system has been designed, including any requirement for the installation of sarking for moisture control of the roof space.

NOTE: See Clause 2.7 and Appendix B4 for information on moisture control in roof spaces.

(k) Pre-camber details.

(l) Reference to this Standard if compliance with this Standard is claimed.

Accessed by TAFE NSW (TAFE Library Services) on 01 May 2017 (Document currency not guaranteed when printed)

2.3.2 Installation

The installation documentation shall include the necessary information for correct selection, location and installation of all truss system members and components, including instructions for lifting and placement, fixing of trusses, installation of tie-down, bracing and lateral restraints and any special requirements for bearing at supports. The documentation shall also include the following specific information:

(a) The information specified in Clause 2.3.1, Items (a), (d), (f) and (i).

(b) A statement requiring installation in accordance with AS 4440 where the requirements of AS 4440 need to be met.

(c) Where alternative or additional requirements to AS 4440 need to be met, this shall be noted in the documentation and the alternative or additional information provided.

(d) A warning label provided for attaching to trusses or framing immediately adjacent to all internal roof access points, as specified in Clause 2.3.3.

NOTE: The installation documentation should be provided in a form suitable for on-site use and supplied with the truss system in a protective cover suitable for on-site conditions.

2.3.3 Labelling

Completed roof trusses and ancillary members and components shall be labelled for identification purposes and to assist with their on-site location and installation, as specified in Clause 2.3.2.

A warning label shall be provided, as specified in Clause 2.3.2, to identify the manufacturer and warn that a structural assessment will be required if additional loading of the truss system is contemplated. If the roof truss system has been designed for additional loads, the loads shall be described on the label and the trusses that support them shall be clearly identified.

NOTES:

1 Whilst it is not a requirement that trusses, ancillary members and components be labelled individually, the labelling of the roof truss system should be sufficient for identification, location and installation purposes.

2 Additional loading is permanent loading over and above the standard roof and ceiling permanent loads, such as a water heater, air conditioner, solar panels or household storage and similar loads. It may also include imposed actions, such as those from access platforms, hoists and fall arrest systems.

3 The warning label may also be used to provide other information, including any specific design or use limitations and any maintenance or inspection requirements.

2.4 MATERIALS

2.4.1 General

The materials used for the manufacture of roof trusses shall be determined based on an assessment of their suitability for this purpose. For timber products, this assessment shall include consideration of structural properties (stress grade), any characteristics that affect joint performance, dimensional tolerances, species and preservative treatment. For steel nailplates, the suitability of the structural properties, withdrawal characteristics and corrosion protection requirements shall be included. For the purposes of this Standard, the products described in Clauses 2.4.2 and 2.4.3 are deemed to meet these requirements.

2.4.2 Timber products

The following timber products shall be deemed to meet the requirements of Clause 2.4.1:

(a) *Standardized* Structural timber products complying with the requirements of the relevant Australian product Standard and for which there are characteristic values for design published in AS 1720.1.

Accessed by TAFE NSW (TAFE Library Services) on 01 May 2017 (Document currency not guaranteed when printed)

(b) *Proprietary* Structural timber products complying with the requirements of the relevant Australian product Standard and, for which there are no characteristic values for design published in AS 1720.1, but these values are publicly available in proprietary literature produced by an identifiable manufacturer.

NOTES:

1 Unseasoned and seasoned timbers should not be mixed within a truss.

2 All timber members in a single truss should be of similar moisture content (±5%) at the time of manufacture to prevent nailplate issues that could arise from differential shrinkage across a joint.

3 The use of mixed species unseasoned timber in a truss is not recommended unless care is taken to ensure the shrinkage characteristics of the species are similar.

2.4.3 Steel products

All structural connections, including nailplates, brackets, straps and framing anchors of the following grades, properties and corrosion protection shall be deemed to meet the requirements of Clause 2.4.1:

(a) Grade:

(i) Nailplates—minimum G300 as specified in AS 1397.

(ii) Other connectors—minimum G300 as specified in AS 1397.

(b) Properties established by testing to AS 1720.1 prototype testing or AS 1649 and for which values are publicly available in proprietary literature produced by an identifiable manufacturer.

NOTE: Nailplate information are not publicly available but may be obtainable from the various nailplate suppliers.

(c) Corrosion protection—minimum Z275 in accordance with AS 1397.

NOTE: In corrosive environments, an increased level of protection (e.g. stainless steel) may be required (see Appendix B6).

2.5 LOADS

2.5.1 General

Roof trusses shall be designed for the actions and combinations of actions specified in AS/NZS 1170.0. For the purposes of this Standard, compliance with Clauses 2.5.2 and 2.6.3, and Section 4 for specific member related provisions, shall be deemed to satisfy this requirement.

2.5.2 Design actions

Permanent, imposed, wind, snow and earthquake actions shall be determined in accordance with the following:

(a) *Permanent* Permanent actions shall be calculated from the design or known dimensions of the structure and the unit masses of the construction materials.

(b) *Imposed*.

NOTE: The imposed actions used for design generally correspond to those given in AS/NZS 1170.1. Specific interpretations for roof truss applications are given in Section 4 of this Standard.

(c) *Wind* The wind actions for strength and serviceability shall be derived using AS/NZS 1170.2 or AS 4055 (see also Clause 1.4).

(d) *Snow* Snow actions shall be determined in accordance with AS/NZS 1170.3.

(e) *Earthquake* Earthquake actions shall be determined in accordance with AS 1170.4.

NOTE: Earthquake actions are generally not critical for timber truss design but may influence the design of fixing and bracing.

Accessed by TAFE NSW (TAFE Library Services) on 01 May 2017 (Document currency not guaranteed when printed)

2.5.3 Design action combinations

Combinations of actions included for the determination of the strength limit states and the serviceability limit states, for each member, shall be those determined appropriate in accordance with AS 1170.0.

NOTE: See also Section 4 for specific member provisions.

Accessed by TAFE NSW (TAFE Library Services) on 01 May 2017 (Document currency not guaranteed when printed)

SECTION 3 DESIGN METHODS

3.1 STRUCTURAL MODELS

The design action effects and deformations shall be determined in accordance with the principles of structural mechanics using elastic analysis. The structural models adopted for these purposes shall represent the application of the design actions and action combinations, the geometry of the roof trusses and the assumptions made for establishing node locations and determining member end fixities.

NOTE: Examples of commonly used structural models and associated information are provided in Appendix C.

3.2 CRITICAL DESIGN ACTION EFFECTS

The relevant structural models shall be subjected to combinations of maximum severe actions to obtain the critical design action effects for strength, stability and serviceability limit states.

3.3 CAPACITY FACTOR

3.3.1 General

Values of the capacity factor for determination of the design capacity of all members and joints shall be obtained from AS 1720.1.

3.3.2 Application category assessment

Roof trusses shall be assessed as Category 1, Category 2 or Category 3 applications as given in Table 3.3.2. Affected area shall be determined in accordance with Clause 3.3.3.

NOTE: For the purposes of this Standard, in Table 3.3.2, residential buildings are considered as for houses in AS 1720.1 since, practically speaking, the roof truss system and its loading is the same for both classifications. Application categories mean the structural application categories in Clause 2.3 and Tables 2.1 and 2.2 of AS 1720.1.

TABLE 3.3.2

APPLICATION CATEGORIES

Affected area	Standard trusses		Girder trusses	
	Residential	Other buildings	Residential buildings	Other buildings
≤25 m^2	Category 1	Category 1	Category 1	Category 2/Category 3*
>25 m^2	Category 1	Category 2	Category 2	Category 2/Category 3*

*For essential service or post-disaster function buildings, as specified in the design documentation.

3.3.3 Affected area

For single-span standard trusses, the affected area shall be taken as the actual span times twice the spacing. For standard trusses with multiple spans, the affected area shall be taken as the distance between the outermost supports times twice the spacing.

For girder trusses, the affected area is considered to be the plan area of roof carried by all supported trusses plus any other contributory area.

NOTES:

1 The affected area is that part of the roof plan area that is likely to collapse due to the failure of the truss and any other trusses it is supporting.

2 Some girder trusses supporting other girder trusses can have quite complex affected areas and care should be taken when assessing these.

Accessed by TAFE NSW (TAFE Library Services) on 01 May 2017 (Document currency not guaranteed when printed)

3.4 STRENGTH LIMIT STATES

3.4.1 General

Strength limit states for the chord and web members of roof trusses shall include an assessment of the effects of the action combinations specified in Clause 2.6.3 and confirmation that these effects do not exceed the design capacity of the members. The design capacity in bending, tension, compression and shear for the chord and web members shall be determined in accordance with AS 1720.1.

NOTE: The design capacity is based upon the characteristic value for the material, the relevant modification factors, the relevant section property and the capacity factor.

3.4.2 Modification factors

3.4.2.1 *Load duration factor*

The member design capacity shall include the load duration factor for timber (k_1), as given in Table 3.4.2.1.

TABLE 3.4.2.1

LOAD DURATION FACTORS (k_1)—STRENGTH

Action	Load duration factor for timber (k_1)
Permanent action—all permanent actions, including that portion of imposed actions that may be present for several years or more	0.57
Distributed floor imposed action; alpine snow action	0.80
Distributed roof imposed action; concentrated floor imposed action; sub-alpine snow action	0.94
Concentrated imposed roof actions	0.97
Wind action	1.00

3.4.2.2 *Moisture content of timber*

The member design capacity shall include the partial seasoning factor (k_4), as given in Table 3.4.2.2.

TABLE 3.4.2.2

PARTIAL SEASONING FACTOR (k_4)—STRENGTH

Load case	Partial seasoning factor (k_4)
Seasoned timber (normal case)	1.0
Unseasoned timber that can dry before full design load is applied, e.g. wind load case	1.0 to 1.15 (see AS 1720.1)

NOTE: The situation where seasoned timber can rise above 15% equilibrium moisture content in service may be ignored as trusses are kept protected [see Clause 2.3.1(j)].

3.4.2.3 *Temperature factor*

For residential buildings, the modification factor for the effect of temperature on strength (k_6) shall be taken as unity regardless of geographical location. For other buildings, k_6 shall be determined from AS 1720.1.

Accessed by TAFE NSW (TAFE Library Services) on 01 May 2017 (Document currency not guaranteed when printed)

3.4.2.4 *Bearing*

All trusses shall be checked for bearing capacity at each support including the application of the length of bearing factor (k_7). The nominal width of the bearing support shall be considered and shall be a strength group of SD6, unless known otherwise. All supports (bearing areas) shall be taken to be within 75 mm of the end of the supported piece of timber, unless known otherwise, and in such cases $k_7 = 1.0$. Where this distance equals or exceeds 75 mm, the characteristic capacity in bearing perpendicular to the grain shall be increased by the value of factor k_7 determined from AS 1720.1.

NOTE: Where the bearing capacity is inadequate, it may be improved by increasing the bearing length, the bearing width or the strength group of the support or truss member (whichever governs). Alternatively a steel bearing plate may be provided under the truss or brackets used to transfer some of the reaction load via fixings (e.g. nails or screws) in shear.

3.4.2.5 *Strength sharing factor*

The member design bending capacity shall include the modification factor for strength sharing (k_9) to allow for sharing of the bending portion of actions between multiple members and between adjacent members. Factor k_9 shall be determined in accordance with AS 1720.1, using the geometric factors g_{31} and g_{32} given in Table 3.4.2.5, with L taken as the bending member length between panel points.

TABLE 3.4.2.5

GEOMETRIC FACTORS FOR PARALLEL SYSTEMS

Number of truss plies (n_{com})	g_{31}	Total number of trusses in parallel system ($n_{com} \times n_{mem}$)	g_{32}
1	1.00	1	1.00
2	1.14	2	1.14
3	1.20	3	1.20
4	1.24	4	1.24
5	1.26	5	1.26
6	1.28	6	1.28
7	1.30	7	1.30
8	1.31	8	1.31
9	1.32	9	1.32
10 or more	1.33	10 or more	1.33

NOTE: The following values of g_{31} and g_{32} are recommended for general use in each truss member:

1 For all laminated veneer lumber (LVL) elements ..... g_{31} and $g_{32} = 1.00$.

2 For a parallel series of trusses (minimum 3) at a maximum nominal spacing of 1200 mm ..... $g_{32} = 1.20$.

3 For all girder trusses ..... $g_{32} = 1.00$.

3.4.2.6 *Stability factor*

The member design capacity shall include the modification factor for stability (k_{12}) calculated in accordance with AS 1720.1.

NOTES:

1 All k_{12} factors are functions of the appropriate slenderness coefficients, S_1, S_3 and S_4, as given in Table 3.4.2.6 and Figure 3.4.2.6.

2 Multi-ply trusses and T-stiffeners—Clause 3.4.5 gives modified slenderness coefficient values for out-of-plane buckling of chords or webs in compression.

Accessed by TAFE NSW (TAFE Library Services) on 01 May 2017 (Document currency not guaranteed when printed)

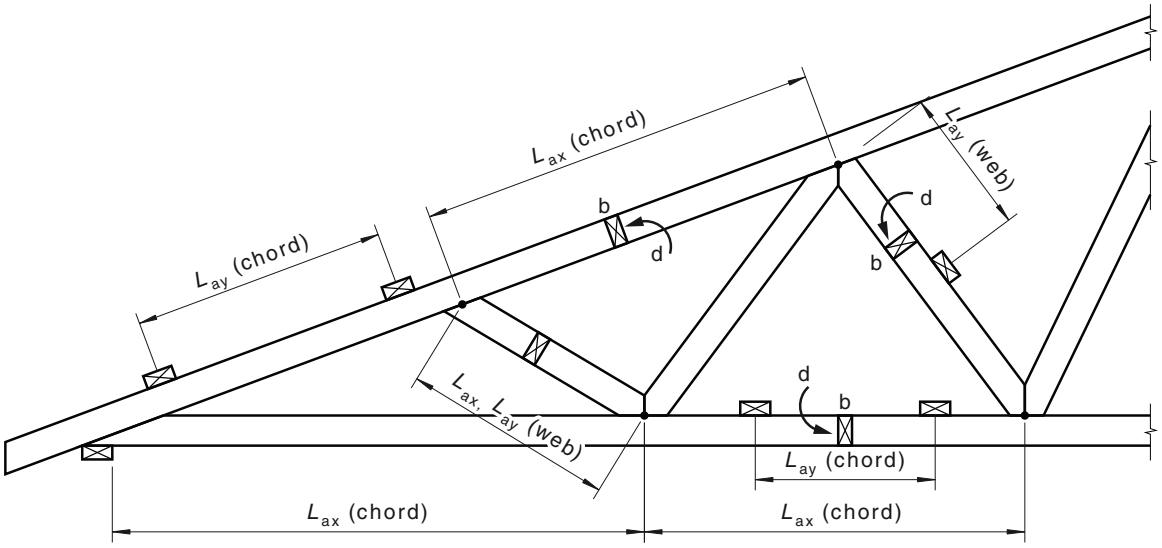

FIGURE 3.4.2.6 EFFECTIVE WEB AND CHORD BUCKLING LENGTHS

TABLE 3.4.2.6

SLENDERNESS COEFFICIENTS

Member		Slenderness coefficient	Modification factor(g_{13T})
Chords	Bending stability	$S_1 = 1.08\sqrt{\dfrac{d \times L_{ay}}{b^2}}$	N/A
	In-plane buckling	$S_3 = g_{13T} \times \dfrac{L_{ax}}{d}$	$g_{13T} = 0.8$
	Out-of-plane buckling	$S_4 = g_{13T} \times \dfrac{L_{ay}}{d}$	$L_{ay} \leq 900$ mm: $g_{13T} = 0.8$ 900 mm $< L_{ay} \leq 1200$ mm: $g_{13T} = 0.9$ $L_{ay} > 1200$ mm: $g_{13T} = 1.0$
Webs	In-plane buckling	$S_3 = g_{13T} \times \dfrac{L_{ax}}{d}$	$g_{13T} = 0.8$
	Out-of-plane buckling	$S_4 = g_{13T} \times \dfrac{L_{ay}}{d}$	$g_{13T} = 0.85$ (with up to one web tie) $g_{13T} = 1.0$ (with two or more web ties)

LEGEND

L_{ax} = for chords, effective chord panel length
= for webs, effective length of web between chords
L_{ay} = for chords, distance between lateral restraints (e.g. batten spacing)
= for webs without web ties, effective length of web between chords
= for webs with web ties, effective length/(number of ties + 1)
g_{13T} = effective length factor for truss design to this Standard
S_3, S_4 = max. 65 for permanent, imposed and snow actions
= max. 80 for wind actions

3.4.3 Tension capacity

Where one or more pre-drilled holes for bolted connections reduces the total cross sectional area by more than 15%, the tension capacity of the member shall be based on the net cross-sectional area. The reductions in area from staggered holes that are spaced within a distance of 5 times the bolt diameter (5D) along the grain of the member shall be combined for this consideration.

Accessed by TAFE NSW (TAFE Library Services) on 01 May 2017 (Document currency not guaranteed when printed)

NOTES:

1 There is no requirement in design to reduce the timber cross-sectional area to allow for nailplate teeth cutting fibres and holes formed from nail and screw fixing in truss members. These are not considered to contribute any reduction in section properties for member design.

2 See Clause 5.2.2.4 for tension member capacity at joints.

3.4.4 Birdsmouth overhangs

The design of birdsmouth overhang strength when the birdsmouth notches are less than one third of the depth of the overhang shall be as specified in Appendix D4. Otherwise the notch procedure given in AS 1720.1 shall be applied.

3.4.5 Lateral restraint

3.4.5.1 *Top chords*

The fixing of battens to every ply of truss top chords with screws or nails in conjunction with diagonal bracing shall be deemed to provide lateral restraint. For hip trusses and girder trusses, the fixing of supported trusses to the chords shall also be deemed to provide lateral restraint to the chords in addition to the battens. The spacing of batten restraints on hip trusses shall take into account the angle the battens make with the truss.

Timber roof battens butt spliced over a truss shall be disregarded from providing lateral restraint unless specific splicing details that deliver restraint are provided. For concrete tile roofs, every second roof batten shall be regarded as an ineffective lateral restraint.

NOTES:

1 For top hat metal battens to be effective in providing lateral restraint, they should be fastened at their base feet to every ply of truss chord.

2 Top hat metal batten profiles screwed to top chords only through the crest of the batten are not deemed to provide adequate lateral restraint.

3 Where required, splices in battens or purlins should be arranged such that in any top chord no more than one-third of battens or purlins are spliced and no two splices are adjacent. There should be no splices in battens or purlins over girder trusses.

4 For light roofs (e.g sheet metal), all roof batten splices should employ specific details to render them effective for lateral restraint against the top chord.

5 Top hat metal battens simultaneously fixed at their base feet through overlapping splices are generally assumed to provide adequate continuity.

6 Where the further design methods for members given in AS 1720.1 are used to assess forces on lateral restraints, n should be taken as the number of equally spaced restraints over the entire length of a straight chord (including splices) between pitch changes and not just the length of a single panel between joints. In typical circumstances, n is the chord length divided by the batten spacing, rounded down to the nearest integer.

3.4.5.2 *Bottom chords*

A plasterboard ceiling directly fixed to truss bottom chords or fixed through a ceiling batten system shall be deemed to provide lateral buckling restraint to the bottom chords. Where ceiling battens are used, they shall be fixed directly to the trusses.

NOTES:

1 The lateral restraint centres for direct fixed ceilings attached with glue and nails or screws may be taken as 600 mm.

2 Battens that are clipped off hangers or suspended from bottom chords are not suitable to provide lateral restraint.

Accessed by TAFE NSW (TAFE Library Services) on 01 May 2017 (Document currency not guaranteed when printed)

3.4.6 Stability of members in compression

3.4.6.1 *Multiple plies*

Where a truss is made up of multiple plies nailed, screwed or bolted together and the truss member (chord or web) is in compression, the procedure given in the further design methods for members in AS 1720.1 for spaced columns shall be used to establish the out-of-plane stability, with the slenderness coefficient S_5 calculated using the following equation:

$$S_5 = 0.3\, g_{13T}\, g_{28}\, L_{ay} \sqrt{\left(\frac{A}{I}\right)} \qquad \ldots 3.4.6.1$$

where

g_{13T} = effective length factor [Table 3.4.2.6]

g_{28} = effective length modification factor

= 1.6 for shaft spacing

= 0 (i.e. no blocks or spacers used between plies)

L_{ay} = length of composite column

A = net combined cross-sectional area of the shafts

I = moment of inertia of the net composite cross-section about the y-axis

3.4.6.2 *T-stiffeners*

A transformed effective breadth (B_{eff}) shall be determined for the compression web or chord to achieve an equivalent out-of-plane stiffness as the combined T-section. The T-stiffener shall not be considered to participate in resisting axial or bending forces. The slenderness coefficient S_4 (effective) for a single ply member with T-stiffener shall be calculated using the following equation:

$$S_4\,(\text{eff}) = g_{13T} \times L_{ay}/B_{eff} \qquad \ldots 3.4.6.2$$

where

g_{13T} = effective length factor [Table 3.4.2.6]

L_{ay} = as given in Table 3.4.2.6

B_{eff} = $\sqrt{\left\{\frac{12\,(I + I_s)}{A}\right\}}$

I = $\frac{(d \times b^3)}{12}$

I_s = $\frac{(d_s \times b_s^3)}{12} \times \frac{E_s}{E}$

A = $b \times d$

b, b_s, d and d_s = dimensions as given in Figure 3.4.6.2

E = modulus of elasticity of the chord or web

E_s = modulus of elasticity of the stiffener

NOTES:

1 The stiffener should occupy the clear length of a chord between lateral restraints. For a web, the stiffener should occupy a minimum of two thirds of the clear length of the web. The clear length should be taken as the shortest distance along either edge of the member.

Accessed by TAFE NSW (TAFE Library Services) on 01 May 2017 (Document currency not guaranteed when printed)

2 Clause 3.6.4.2 may also be used for members with individual scabs.

3 A similar procedure to Clause 3.6.4.2 may be used for members with other types of stiffeners, e.g. shaped metal stiffeners. Performance constants are then usually established from full-scale tests.

4 The addition of a timber T-stiffener nailed to the edge of a chord or web improves the out-of-plane stability of that member when it is in compression.

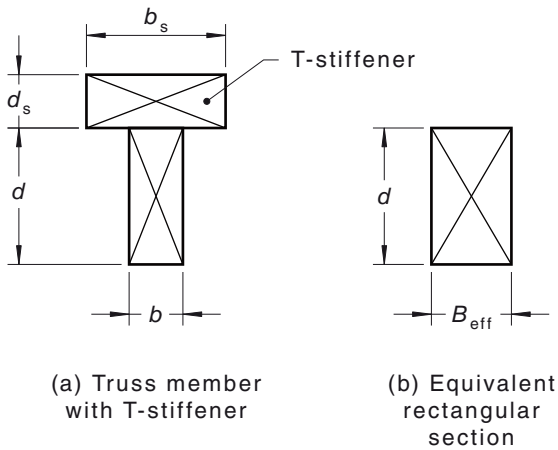

FIGURE 3.4.6.2 T-STIFFENER DIMENSIONS

3.5 STABILITY LIMIT STATES

Consideration of the stability limit states for roof trusses and the roof truss system shall include an assessment of the effects of the action combinations specified in Clause 2.6.3 and confirmation that these effects do not exceed the design resistance of the roof trusses or roof truss system.

3.6 SERVICEABILITY LIMIT STATES

3.6.1 General

Consideration of the serviceability limit states for roof trusses and their chord members shall include an assessment of the effects of the action combinations specified in Clause 2.6.3 and confirmation that the effects fall within the limits for allowable deformation specified in Clause 4.3.3. The assessment of the effect of the action combinations shall be based upon the characteristic value of modulus of elasticity for the material, any relevant modification factors, the relevant section property and joint slip.

3.6.2 Camber

Trusses shall be cambered at panel points along the bottom chord to reduce the effect of permanent action deflections, including the effect of creep.

NOTES:

1 The preferred method of assessing the overall effect of creep is to apply creep effects in each member during analysis for long-term actions.

2 The purpose of cambering a truss is to offset estimated permanent deflections under the principle that when the permanent load is applied, the truss in service will then achieve an approximately level bottom chord line.

3 Trusses may be cambered more or less than the predicted deflection according to preferences.

Accessed by TAFE NSW (TAFE Library Services) on 01 May 2017 (Document currency not guaranteed when printed)

4 An assessment should be made of the estimated deflections between adjacent trusses. If they are excessive for serviceability, the truss designs should be modified to reduce the difference in adjacent deflections. Provided adequate clearances are maintained under the truss, the camber has no structural effect.

5 Truss cambers are not easily achieved when—

(a) the web layout is not fully triangulated and some or all of the chord members are primarily in bending, e.g. cove trusses, attic trusses and supports at mid-panels;

(b) trusses have very deep and stiff chords (in these circumstances, more stringent serviceability limits should be considered); or

(c) trusses are multiple spans.

3.6.3 Duration of load factor for creep deformation

The effects of creep shall be taken into account in the serviceability design of trusses subjected to permanent actions and long-term imposed actions. The calculated short-term deformation of each individual member in compression, tension and bending shall be modified by the appropriate modification factor j_2 or j_3 to derive the total deflection of the entire truss, as given in Table 3.6.3.

NOTE: For further information including intermediate values see AS 1720.1.

TABLE 3.6.2

DURATION OF LOAD FACTOR FOR CREEP DEFORMATION

Moisture content*	Bending, compression and shear (j_2)		Tension (j_3)	
	Permanent actions	Transient actions	Permanent actions	Transient actions
Seasoned	2.0	1.0	1.0	1.0
Unseasoned	3.0	1.0	1.5	1.0

* Initial moisture content at the time of load application

NOTE: The net truss effect for standard trusses is a combined value of approximately 1.5 for seasoned timber and 2.25 for unseasoned timber.

3.6.4 Birdsmouth overhangs

For birdsmouth notches less than one third of the depth of overhangs, the deflection at the ends of the overhangs shall be determined using Appendix D2. For other cases, the deflection of the overhangs shall be calculated using the nett cross-section after notch reduction.

Accessed by TAFE NSW (TAFE Library Services) on 01 May 2017 (Document currency not guaranteed when printed)

SECTION 4 MEMBER DESIGN

4.1 GENERAL

This Section specifies the requirements for the design of some of the more common types of roof trusses.

NOTES:

1 The more common types of roof trusses are shown in Appendix A (see also Clause 1.7).

2 The design principles given in this Section may be used as a guide for the design of other types of roof trusses. In such cases, modification of the design requirements will most likely be required to suit the specific application.

4.2 DESIGN FOR SAFETY

4.2.1 Design actions

4.2.1.1 *General*

The actions used for the purpose of assessing the strength limit states shall be determined in accordance with Clause 2.6 and as described in Clauses 4.2.1.1 to 4.2.1.6, where—

G = permanent action (in kilonewtons or kilopascals)

Q_1 = distributed imposed roof action (in kilopascals)

Q_{1f} = distributed imposed floor action (in kilopascals)

Q_2 = concentrated imposed roof action applied to top chord (in kilonewtons)

Q_3 = concentrated imposed ceiling action applied to bottom chord (in kilonewtons)

Q_{3f} = concentrated imposed floor action applied to bottom chord (in kilonewtons)

Q_4 = concentrated imposed roof action applied to overhangs (in kilonewtons)

W_{ue} = external wind action (in kilopascals)

W_{ui} = internal wind action (in kilopascals)

NOTE: It is common practice to ascribe the appropriate actions to the top or bottom chord.

4.2.1.2 *Standard trusses*

The design actions for standard trusses shall be determined as follows:

(a) *Permanent action (G)* corresponding typically to specified roof and ceiling materials (including battens, insulation etc.) and self-weight.

NOTES:

1 All permanent actions should be adjusted for the angle of the supporting plane.

2 Where additional service loads such as a water heater, air conditioner, solar panels, household storage are supported, a provision for these should be included in the determination of G.

(b) *Imposed action (Q)* which shall be determined from:

(i) Distributed imposed action to top chords—

$$Q_1 = 0.25 \text{ kPa for residential buildings} \quad \ldots 4.2.1.2(1)$$

otherwise

$$Q_1 = g_{43} \times \left(\frac{1.8}{A_r} + 0.12\right) \text{ or } 0.25 \text{ kPa, whichever is the greater} \quad \ldots 4.2.1.2(2)$$

Accessed by TAFE NSW (TAFE Library Services) on 01 May 2017 (Document currency not guaranteed when printed)

where

A_r = the plan projection of the surface area of roof supported by the truss, in square metres, including any overhangs.

NOTE: For example, A_r for a simply supported standard truss = span × $\frac{\text{spacing}}{2}$

g_{43} = the load distribution factor, for partial area loads, applied to a grid system and calculated in accordance with AS 1720.1 (see Note 2)

(ii) Concentrated imposed action to top chords:

$$Q_2 = g_{42} \times P \qquad \text{. . . 4.2.1.2(3)}$$

where

P = 1.1 kN for residential buildings, otherwise 1.4 kN

g_{42} = the load distribution factor, for concentrated load, applied to a grid system and calculated in accordance with AS 1720.1 (see Note 2)

(iii) Concentrated imposed action to bottom chords:

$$Q_3 = g_{42} \times P \qquad \text{. . . 4.2.1.2(4)}$$

where

P = 1.1 kN for residential buildings, otherwise 1.4 kN

or

= 0.9 kN where there is headroom of less than 1.2 m after installation of the cladding

g_{42} = the load distribution factor, for concentrated load, applied to a grid system and calculated in accordance with AS 1720.1 (see Note 2)

(iv) Concentrated imposed action to overhangs:

$$Q_4 = g_{45} \times 1.1 \qquad \text{. . . 4.2.1.2(5)}$$

where

g_{45} = 1 unless a structural fascia is used, in which case g_{45} shall be calculated in accordance with Appendix D

NOTES:

1 The concentrated load (P) is considered to be located anywhere on truss top or bottom chords except for overhangs where this load may be taken to be acting 150 mm from the end of the overhang for normal trusses and 300 mm from the end of the overhang for hip trusses.

2 In the absence of specific information, top chord load distribution may be determined assuming that the crossing members are battens with rigidity as follows:

(a) Sheet roofs: $E_cI_c = 2.5 \times 10^9$ Nmm^2.

(b) Tile roofs: $E_cI_c = 380 \times 10^6$ Nmm^2.

A crossing member with rigidity $E_cI_c = 2.5 \times 10^9$ Nmm^2 fixed in the centre of each panel may be assumed for bottom chord load distribution. In such cases the crossing member/s should be specified in the design and installation documentation.

For the purposes of calculating g_{42} and g_{43} in accordance with the further design methods for members in AS 1720.1, the span (L) should be based on the length of the panel in which the load is applied.

Accessed by TAFE NSW (TAFE Library Services) on 01 May 2017 (Document currency not guaranteed when printed)

(c) *The external wind action* (W) shall be determined using AS/NZS 1170.2 from—

$W_{ue} = q_u C_{fig,e}$ . . . 4.2.1.2(6)

$W_{ui} = q_u C_{fig,i}$ . . . 4.2.1.2(7)

where

$q_u = 0.6 V^2$ (V = design gust wind speed)

$C_{fig,e} = C_{p,e} K_a K_{c,e}$ and $0.9 \geq K_a K_{ce} \geq 0.8$

$C_{fig,i} = C_{p,i} K_{c,i}$

$K_{ce}, K_{ci} = 0.9$

$C_{p,e}$ = net external pressure coefficient from AS/NZS 1170.2

$C_{p,i}$ = net internal pressure coefficient from AS/NZS 1170.2 ($C_{p,I} \geq 0.2$)

K_a = area reduction factor from AS/NZS 1170.2

$K_{c,e}$ = combination factor applied to external pressures from AS/NZS 1170.2

$K_{c,i}$ = combination factor applied to internal pressures from AS/NZS 1170.2

NOTE: Where wind loads are evaluated using AS 4055 (see Clause 1.4), $C_{fig,e} = K_L C_{p,e}$ and $C_{fig,I} = C_{p,i}$ for roof general areas may be used.

(d) *Snow* The distributed snow action, (S_u) (in kN/m), applied to the top chord shall be determined from AS/NZS 1170.3.

4.2.1.3 *Girder trusses*

Design actions shall be as for standard trusses except as follows:

(a) *Permanent action (G)* shall include the following load sources:

(i) Distributed roof and ceiling materials (including battens, insulation etc.) acting directly on the truss chords and self-weight.

(ii) A series of one or more concentrated loads representing the permanent action reactions from supported elements (e.g. trusses and beams).

(b) *Imposed action (Q)*:

(i) Distributed action (Q_1)—

Q_1 = 0.25 kPa for residential buildings . . . 4.2.1.3(1)

otherwise

$Q_1 = \left(\frac{1.8}{A_r + 0.12}\right)$ kPa or 0.25 kPa, whichever is the greater . . . 4.2.1.3(2)

where

A_r = plan projection of the surface area of roof supported by the girder truss

NOTE: The area (A_r) is made up of the proportion of roof plane area acting directly on the girder truss top chords plus the areas contributing to the reactions from all supported trusses and beams.

(ii) Concentrated actions (Q_2, Q_3, Q_4)

These actions shall be applied as for a standard truss.

NOTE: The reactions from the supported elements, for this action effect, are not applied.

Accessed by TAFE NSW (TAFE Library Services) on 01 May 2017 (Document currency not guaranteed when printed)

(c) *Wind action (W_u)* The wind pressure acting on a girder truss depends, in part, on the total roof area supported by the girder truss. The wind action shall include the following:

(i) Distributed wind action on roof and ceiling planes acting directly on the girder truss chords.

(ii) A series of one or more concentrated wind action reactions from supported elements (e.g. trusses, beams).

NOTES:

1 The reactions referred to in Item (c)(ii) may be modified due to the value of (K_a K_{ce}) applicable to the girder truss, which may be less than the value of (K_a K_{ce}) applicable to each supported element.

2 Care should be taken to ensure the action effects are consistent with the direction of the wind on the building. For example, the wind direction parallel to a supported standard truss is likely to be the wind direction perpendicular to the supporting girder truss.

4.2.1.4 *Truncated trusses*

The action effects applied to a truncated standard truss shall be as for a standard truss except that the horizontal and sloping top chords receive loads from different roof planes.

The action effects applied to a truncated girder truss shall be determined in the same manner as for a normal girder truss, with the reactions of the supported trusses applied as concentrated loads to the horizontal top chord, bottom chord, or both.

4.2.1.5 *Attic trusses*

The load actions on an attic truss shall be considered similar to a standard truss with the addition of imposed floor loads and internal wind pressures acting within the habitable space.

Where intermediate floor joists are used, consideration shall be given to the bottom chord of the attic truss having a different spacing to the other attic truss components over the length of the habitable space.

NOTE: The load paths from dormers, intermediate ceiling joists and similar components should be considered where applicable.

The design actions for attic trusses shall be determined as follows:

(a) *Permanent and long-term imposed action*:

$$G + \psi_1 Q_{1f} \qquad \text{. . . 4.2.1.5(1)}$$

where

G includes the flooring material and attic wall and ceiling linings

Q_{1f} = value specified for the floor

ψ_1 = 0.33 for habitable floors in residential buildings, otherwise see AS/NZS 1170.0

(b) *Imposed action (Q)*:

(i) Distributed action (Q_1)

Imposed loads on the roof components, (Q_1), and on the floor components, (Q_{1f}), shall be applied separately:

Q_1 = value as for standard gable trusses

Q_{1f} = value specified for the floor

Accessed by TAFE NSW (TAFE Library Services) on 01 May 2017 (Document currency not guaranteed when printed)

(ii) Concentrated actions (Q_2, Q_{3f}, Q_4) Actions Q_2 and Q_4 shall be applied as for a standard truss. The floor component Q_{3f} shall be calculated as follows:

$$Q_{3f} = g_{42} P \quad \text{. . . 4.2.1.5(2)}$$

where

P = 1.8 kN for residential buildings, otherwise see AS/NZS 1170.1

g_{42} = the load distribution factor, for concentrated load, applied to a grid system and calculated in accordance with AS 1720.1

(c) *Wind action (W_u)* The determination of internal wind pressures for an attic truss shall consider the lining continuity and any effect on the non-habitable components when linings are absent.

The internal wind pressures on the floor elements shall be assumed to act equally and oppositely on the upper and lower floor linings, producing a net zero wind action effect.

4.2.1.6 *Gable end trusses*

The determination of design actions on the chords of a gable end truss shall take into account the non-standard truss spacing applicable to the roofing and ceiling linings in addition to the actions on the top chord from the outriggers. The cantilever effect of outrigger backspans shall be considered in assessing the reactions of the outriggers on the gable end truss.

NOTES:

1 The gable end may be formed using Z-sprockets in place of outriggers. References to outriggers in this document apply equally to Z-sprockets.

2 The outermost (corner) outrigger may have a non-standard spacing and is required to support the bargeboard to the corner.

3 As with other girder trusses, care should be taken to ensure that the direction of the wind is consistent. For example, the wind parallel to the outrigger is perpendicular to its supporting gable end truss.

4 Wind acting on the face of the gable needs to be resisted by components that are independent of the gable end truss (e.g. jack studs).

5 The design actions on outriggers are similar to those for a standard gable truss overhang except that there are no action effects on the backspan of an outrigger apart from its own self-weight.

4.2.1.7 *Wind trusses*

Where the building specifications specify wind trusses, the design shall consider wind action effects and a check to ensure that the truss will not sag due to self-weight. The wind actions shall be applied as uniformly distributed loads along the full length or as point loads applied where the wind truss is fixed to the standard trusses.

4.2.2 Design action combinations

The action combinations shown in Table 4.2.2 shall be used for the determination of design capacity as specified in Clause 4.2.3 except that, for attic trusses, a combination of permanent plus imposed plus wind action shall be considered as specified in AS 1170.0, with the design action effect, (E_d), determined from the following:

$$E_d = 1.2G + W_u + \psi_c Q_{1f} \quad \text{. . . 4.2.2}$$

where

W_u = downdraft wind action

ψ_c = 0.33 for habitable floors in residential buildings, otherwise see AS/NZS 1170.0

Q_{1f} = distributed imposed floor action

Accessed by TAFE NSW (TAFE Library Services) on 01 May 2017 (Document currency not guaranteed when printed)

TABLE 4.2.2

ACTION COMBINATIONS—STRENGTH

Actions	Top chord	Bottom chord
Permanent actions	$1.35G$	$1.35G$
Imposed actions	$1.2G + 1.5Q_1$	
	$1.2G + 1.5Q_2$	$1.2G + 1.5Q_3$
	$1.2G + 1.5Q_4$	$1.2G + 1.5Q_4$
Snow actions	$1.2G + S_u$	
Wind actions[1]	$0.9G + W_{ue}\uparrow$	$0.9G + W_{ui}\uparrow$
	$1.2G + W_{ue}\downarrow$	$1.2G + W_{ui}\downarrow$

NOTES:

1 In the case of exposed bottom chords, both internal and external wind pressures ($W_{ue} + W_{ui}$) shall apply to top chords.

2 No load cases are included in Table 4.2.2 for construction loads only. Concentrated imposed loads are considered in the context of a fully clad and loaded truss with all bracing and lateral restraints in place.

4.2.3 Design capacity

The requirements of AS 1720.1 shall be applied to determine member design capacities in accordance with Clause 3.4.

4.3 DESIGN FOR SERVICEABILITY

4.3.1 Design actions

The actions used for the purpose of assessing the serviceability limit states shall be as specified in Table 4.3.1 and as set out in Clause 4.2.

NOTE: See also Clause 2.6.

TABLE 4.3.1

DESIGN ACTIONS—SERVICEABILITY

Loads	Top chord	Bottom chord
Permanent load	G	G
Distributed imposed load	Q_1	—
Concentrated imposed load	Q_2, Q_4	Q_3, Q_4
Wind load upwards (see Note)	$W_{se}\uparrow$	$W_{si}\uparrow$
Wind load downwards (see Note)	$W_{se}\downarrow$	$W_{si}\downarrow$
Snow	S_s	—

NOTE: In the case of exposed bottom chords, both internal and external wind pressures ($W_{se} + W_{si}$) shall apply to top chords.

4.3.2 Calculation of deflection

The requirements of AS 1720.1 for the calculation of deflection shall be applied in accordance with Clause 3.6.

4.3.3 Serviceability limits

The limits on deflection, defining the serviceability limit state, are given in Table 4.3.3.

Accessed by TAFE NSW (TAFE Library Services) on 01 May 2017 (Document currency not guaranteed when printed)

TABLE 4.3.3
LIMITS ON DEFLECTION

Location	Action	Vertical deflection limit
Top chord panel	G	$\frac{L_i}{300}$
	Q, S_s	$\frac{L_i}{250}$
	W_s	$\frac{L_i}{150}$
Bottom chord panel	G	$\frac{L_i}{300}$
	Q_{1f}, Q_{3f}	Lesser of $\frac{L_i}{360}$ or 9 mm
Overhang— general	G	Greater of 12 mm and $\frac{L_o}{100}$
Overhang— hip		Greater of 16 mm and $\frac{L_o}{100}$
Truss (overall)	G	$\frac{L}{300}$
Relative deflection between joints	G	Greater of 5 mm and $\frac{L_i}{100}$ or $\frac{L_c}{100}$
Relative horizontal displacement between outer supports	G	10 mm

LEGEND
L_i = panel length
L_o = overhang length
L_c = cove length
L = truss span

NOTES:

1 Where trusses support directly fixed ceilings, it is preferable that differential camber between them does not exceed $\frac{\text{truss spacing}}{100}$. This is important in several circumstances, e.g. with—

(a) heavily loaded trusses alongside lightly loaded trusses;

(b) low pitched trusses; or

(c) trusses of significantly different spans.

2 The deflection of overhangs is the absolute deflection, including the effect of rotation at the heel joint.

Accessed by TAFE NSW (TAFE Library Services) on 01 May 2017 (Document currency not guaranteed when printed)

SECTION 5 JOINT DESIGN

5.1 GENERAL

This Section specifies requirements for the design of joints for timber roof trusses.

NOTE: Further information may be found in ANSI/TPI 1 and TPIC.

5.2 STRENGTH LIMIT STATES

5.2.1 General

Consideration of the strength limit states for the nailplated joints in roof trusses shall include an assessment of the effects of the action combinations specified in Clause 4.2.2 and confirmation that these effects do not exceed the design capacity of the joints. The design capacity of a joint shall be determined as the lesser of the tension perpendicular to grain capacity of the timber in the vicinity of the nailplate, the timber shear at joint capacity, the tooth load capacity and the nailplate steel capacity in tension or shear as appropriate.

5.2.2 Timber design capacity

5.2.2.1 *General*

The tension capacity of the timber perpendicular to grain and the shear at joints capacity shall be determined based upon the characteristic value for the material, the relevant modification factors, the relevant section property and the capacity factor (see Clause 3.3).

NOTE: If a single point analogue is used at the heel joint, the incidental transfer of the bending moment should be considered (see Appendix C).

5.2.2.2 *Timber shear*

Where a heel plate extends over the bearing surface by at least 5 mm, the joint shear in the top and bottom chords resulting from the support reaction shall be resisted in part by the shear capacity of the nailplate [see Figure 5.2.2.2(a)].

Where the heel plate does not overlap the bearing surface by at least 5 mm, the top and bottom chords shall be designed to resist the entire vertical shear at the bearing support edge as shown in Figure 5.2.2.2(b). If the depth of the bottom chord above the inside face of the support is less than 50 mm, its contribution to resisting the vertical shear at the heel shall be ignored.

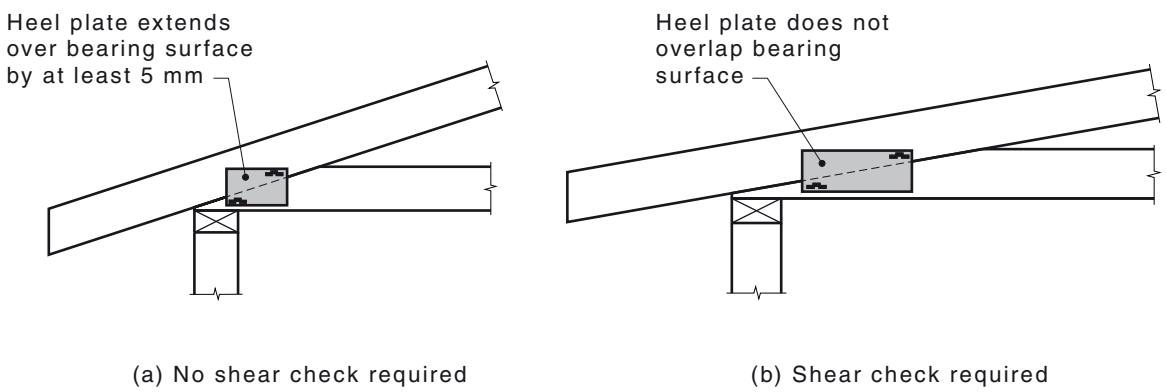

FIGURE 5.2.2.2 SHEAR CHECKS

Accessed by TAFE NSW (TAFE Library Services) on 01 May 2017 (Document currency not guaranteed when printed)

5.2.2.3 *Tension perpendicular to grain*

The design capacity in tension perpendicular to grain ($N_{d,tp}$) shall be calculated in accordance with AS 1720.1 based on the effective length shown in Figure 5.2.2.3(a) and with the tension line taken at a position 6 mm from the edges of the nailplate.

In a heel joint, tension perpendicular to grain does not need to be considered where the heel plate overlaps the bearing surface by at least 5 mm. Where the heel plate overlaps the bearing surface by less than 5 mm, the truss is considered to be supported on the top chord and, in such cases, the top chord shall be designed to resist tension perpendicular to grain above the heel plate, as shown in Figure 5.2.2.3(b).

NOTE: It is not necessary to consider tension perpendicular to grain when the nailplate penetration (t_p) exceeds 85% of member depth (d).

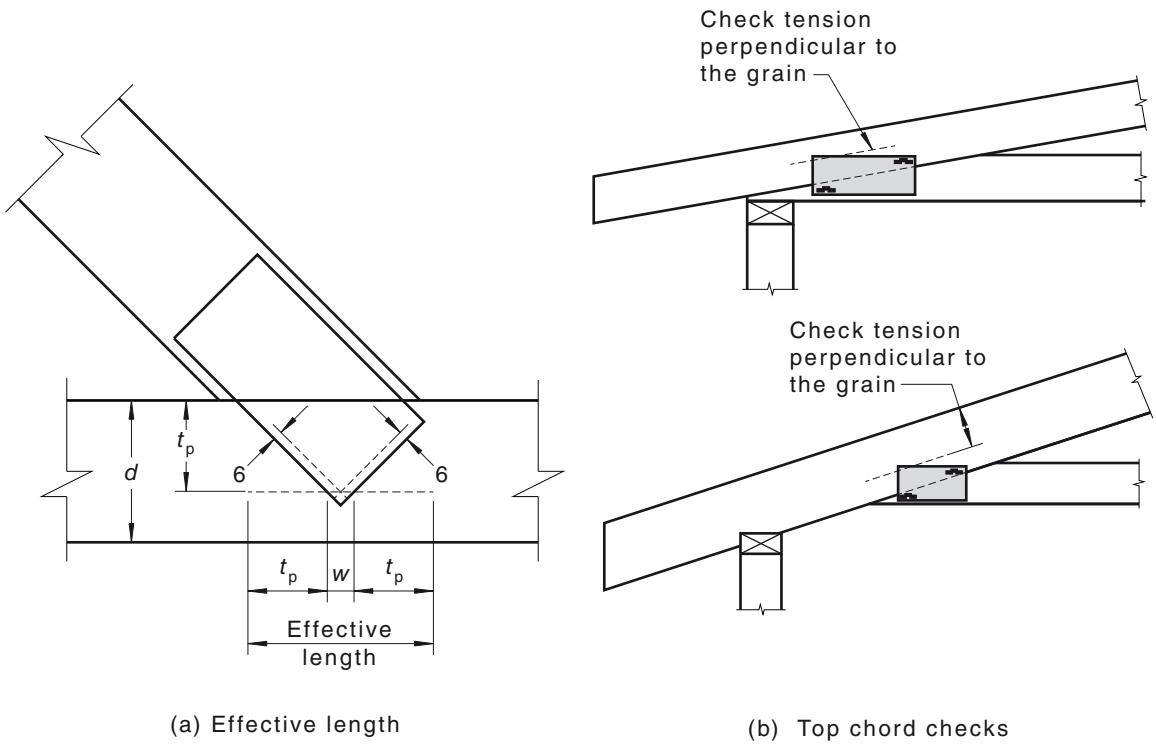

FIGURE 5.2.2.3 TENSION PERPENDICULAR TO GRAIN

5.2.2.4 *Timber tension at joint*

The tension capacity at the ends of the top chord, bottom chord and web shall be checked against breaking away from a plated joint by calculating the tension stress from the reduced net section ($b \times h'$) resulting from the coverage of the plate based on the effective depth (h') shown in Figure 5.2.2.4(a). The full cross-sectional area shall be adopted when the net area exceeds 80% of the full cross-sectional area.

The total effective depth of double-heel plates shall not be greater than the overall depth of the bottom chord as shown in Figure 5.2.2.4(b).

NOTE: This type of failure is generally only a consideration when the nailplate covers a small part of the cross-section of the member.

Accessed by TAFE NSW (TAFE Library Services) on 01 May 2017 (Document currency not guaranteed when printed)

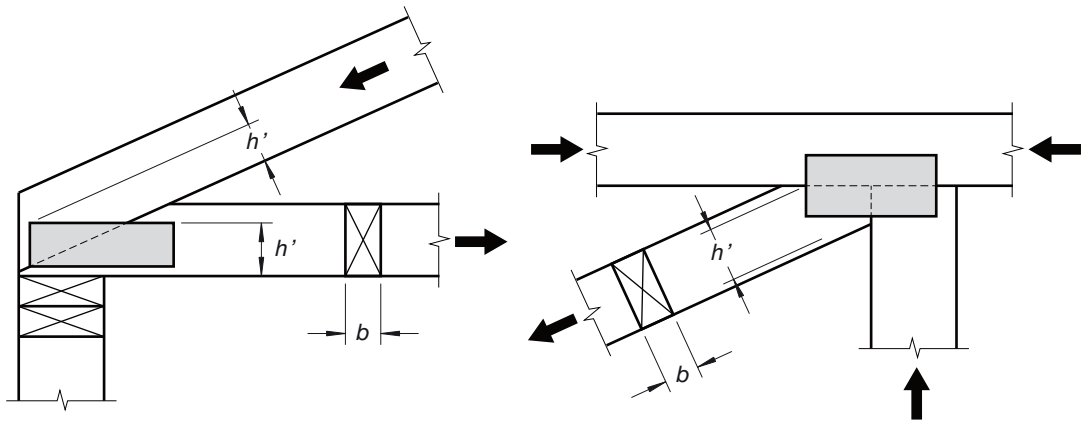

(a) Tension at member ends

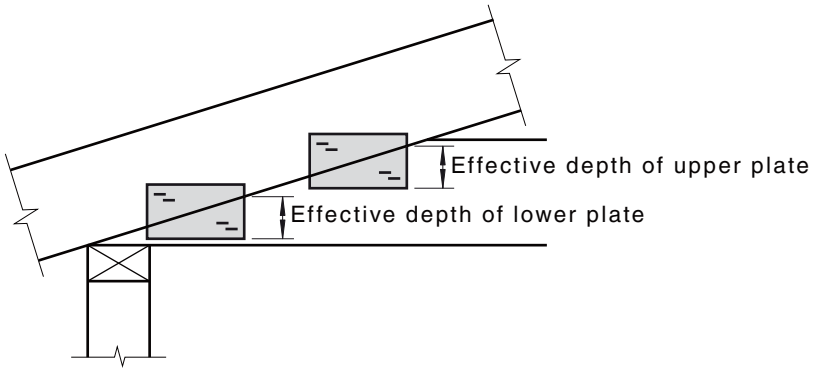

(b) Double-heel plates

FIGURE 5.2.2.4 EFFECTIVE DEPTH OF MEMBER IN TENSION

5.2.3 Nailplate design

5.2.3.1 *General*

Nailplate design requires proprietary design information. The provisions of Clauses 5.2.3.2 and 5.2.3.3 provide a general basis for design.

NOTE: Further information may be obtainable from the various nailplate suppliers.

5.2.3.2 *Tooth capacity*

The following applies:

(a) *General* Nailplates shall have sufficient teeth to develop a minimum axial force of 2.5 kN (k_1 = 1.0) and cover a minimum area of 500 mm^2 over each timber member at each joint.

NOTE: This is required to satisfy handling stresses in the truss during manufacture and installation.

(b) *Design principles* Where a joint has timber members of different tooth groups the tooth requirement shall be determined for the individual tooth group for each member or by using the weakest tooth group of all members at the joint.

The load duration factor for joints using nailplates, k_1, shall be considered when determining the number of effective teeth within a joint area, as given in Table 5.2.3.2.

Accessed by TAFE NSW (TAFE Library Services) on 01 May 2017 (Document currency not guaranteed when printed)

(c) *Nailplate pressing method* The design of a nailplated joint shall account for the tooth capacity appropriate to the pressing method.

(d) *Nailplate placement tolerances* The design of a nailplated joint shall allow for the nailplate to be misplaced by up to 6 mm in any direction.

(e) *Timber end and edge distances* Any nailplate teeth that fall within 6 mm of the edge of the timber perpendicular to the grain, or 12 mm from the end of the timber parallel to the grain, their contribution shall be ignored.

(f) *Allowance for load at angle to the grain* Design loads are published for most nailplates based on the applied load being parallel or perpendicular to the grain of timber (denoted by $\alpha = 0$ or 90°) and nailplate axis or slots (denoted by $\beta = 0$ or 90°) as shown in Figure 5.2.3.2. Interpolation, using Hankinson's formula, shall be used for loads acting at an angle to the grain or the nailplate axis.

(g) *Defects* The tolerance limits, for timber defects located in the nailplated region, that are acceptable for the design shall be defined.

(h) *Members in compression at a joint* For a timber member at a joint, it may be assumed that 50% of the compression force vector perpendicular to the other member will be transferred in timber bearing, provided this bearing stress is also checked in the timber design.

(i) *Heel plate* The nailplate at a heel joint shall allow for moment effects as predicted by the multi-joint heel analogue or by applying the heel plate factor, H—

where

$$H = 0.85 \text{ for } \theta < 10°$$

$$H = 0.65 \text{ for } \theta > 27°$$

$$H = 0.85 - 0.05\,(12 \tan \theta - 2.0) \text{ for } 10° \geq \theta \leq 27° \qquad \ldots 5.2.3.2$$

and

θ = angle between the top chord and the bottom chord

NOTES:

1 See the multi-joint heel analogue model in Appendix C1.

2 The angle θ is not necessarily the roof pitch.

(j) *Double-heel plate* Where double-heel plates are used, each heel plate shall be deemed to share, proportionally in relation to their sizes, the axial forces and moments.

TABLE 5.2.3.2

LOAD DURATION FACTORS (k_1)—STRENGTH

Action	Load duration factor for joints using nailplates, k_1
Permanent action—all permanent actions, including the long term portion of imposed actions	0.57
Distributed floor imposed action; alpine snow action	0.69
Distributed roof imposed action; concentrated floor imposed action; sub-alpine snow action	0.77
Concentrated imposed roof actions	0.86
Wind action	1.14

Accessed by TAFE NSW (TAFE Library Services) on 01 May 2017 (Document currency not guaranteed when printed)

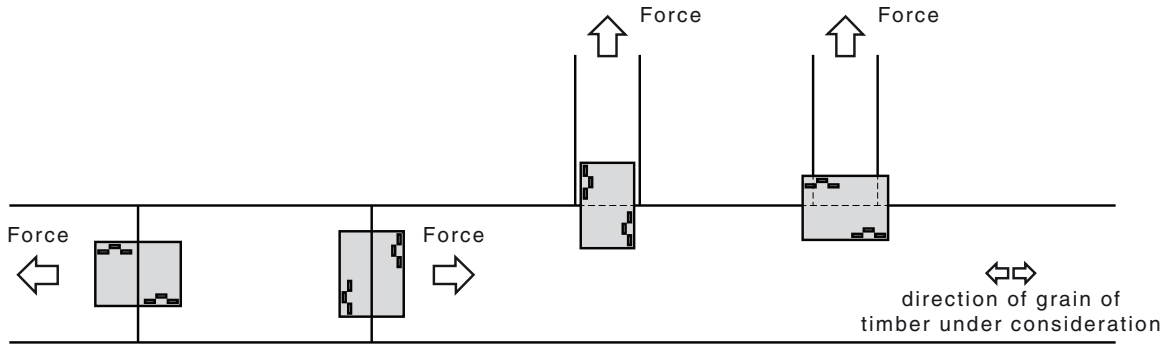

(i) $\alpha = 0°$; $\beta = 0°$ (ii) $\alpha = 0°$; $\beta = 90°$ (iii) $\alpha = 90°$; $\beta = 0°$ (iv) $\alpha = 90°$; $\beta = 90°$

LEGEND:
α = angle between the direction of the applied force and the direction of the grain of the timber
β = angle between the direction of the applied force and the direction of nailplate slots

FIGURE 5.2.3.2 NAILPLATE DESIGN LOADS

5.2.3.3 *Steel capacity*

The following applies:

(a) *General* Nailplated joints shall be designed to ensure that the steel section of the nailplate will restrain both the shear and tension forces within the joint. The capacity factor (ϕ) used to determine nailplate steel strength shall be 0.9 for all load cases.

(b) *Shear* The shear capacity of nailplates shall be determined using the net shear section of the nailplate and include consideration of the direction of shear load relative to the plate axis.

Where the shear path is confined by the timber interface, the net shear length (L_{sc}) of nailplate shall be as shown in Figure 5.2.3.3(a).

Where the nailplate is larger than the joint (unconfined nailplate), the net shear length shall be taken as the length of the timber interface plus the effective lengths of the unrestrained nailplate zones (L_{a1}, L_{a2} or L_{a3}) as applicable and defined in Figure 5.2.3.3(b).

For chords, net shear length = $L_{sc} + L_{a1} + L_{a2}$

For webs, net shear length = $L_{sw} + L_{a3}$

(c) *Tension* The determination of nailplate tension capacity shall include consideration of the direction of tension load relative to the plate axis.

(d) *Splices* For mid-panel splices, no nailplate protrusions shall extend beyond the outside face of the chord.

NOTE: Protrusions up to 12 mm beyond the inside face of the chord are accepted [see Figure 5.2.3.3(c)].

(e) *Plate buckling* Due to the gauge of nailplates, the steel cross-section does not contribute compression strength in the joint. The effect of plate buckling relative to the restraint provided by regularly spaced tooth embedment into timber shall be factored into the determination of plate shear design properties obtained through testing.

(f) *Heel joints* All relevant actions shall be taken into account in ensuring the effective transfer of loads from one member to another.

NOTES:

1 See Appendix C.

2 Heel joints are generally the most critical joints in a truss.

Accessed by TAFE NSW (TAFE Library Services) on 01 May 2017 (Document currency not guaranteed when printed)

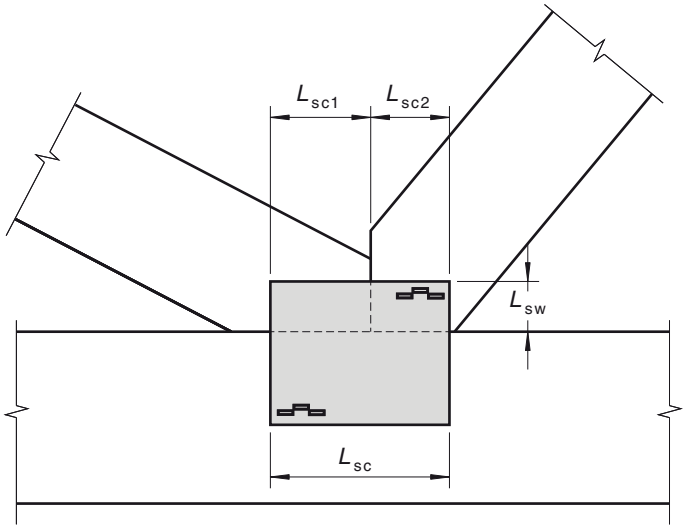

LEGEND:
L_{sc} = Net shear length (chord)
L_{sw} = Net shear length (web)

(a) Net shear length for a fully confined nailplate

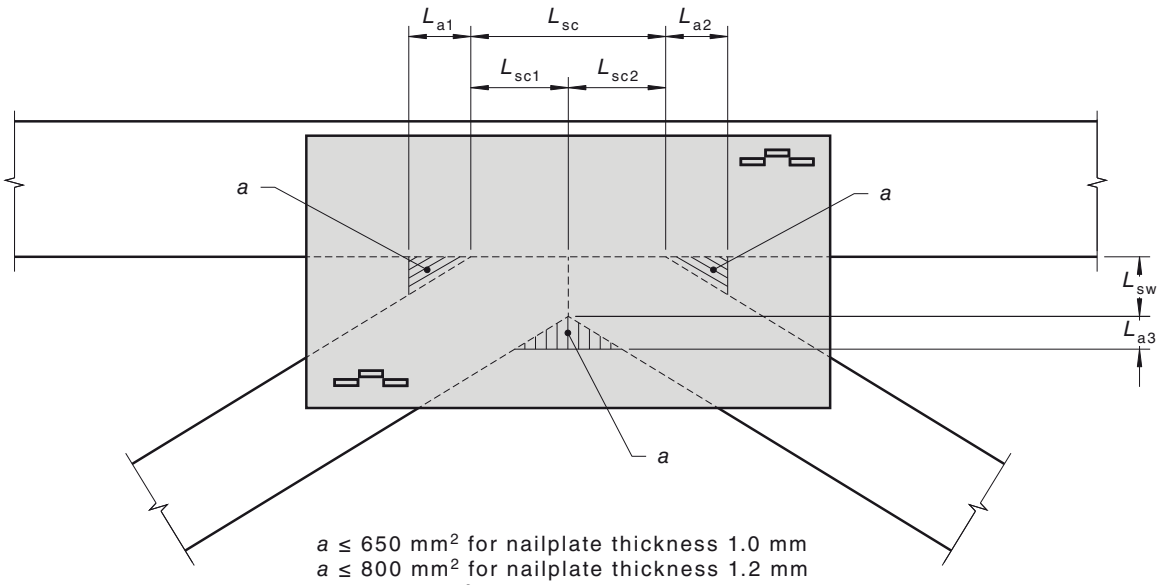

$a \leq 650$ mm^2 for nailplate thickness 1.0 mm
$a \leq 800$ mm^2 for nailplate thickness 1.2 mm
$a \leq 1000$ mm^2 for nailplate thickness 1.5 mm

(b) Net shear length for an unconfined nailplate

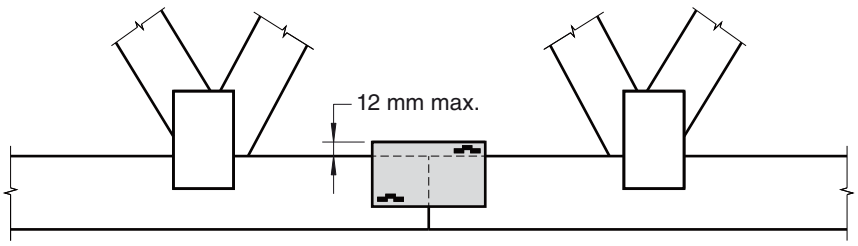

(c) Splice plate protrusion limit

FIGURE 5.2.3.3 DIMENSIONS FOR DETERMINING STEEL CAPACITY

Accessed by TAFE NSW (TAFE Library Services) on 01 May 2017 (Document currency not guaranteed when printed)

5.2.4 Eccentric joints

All connections shall be assessed to identify eccentricity and, where necessary, any resulting additional forces or moments shall be taken into account in the design.

Accessed by TAFE NSW (TAFE Library Services) on 01 May 2017 (Document currency not guaranteed when printed)

APPENDIX A

NOMENCLATURE

(Informative)

A1 GENERIC TERMS

Figure A1 illustrates generic terms applying to roof trusses and roof truss systems.

Accessed by TAFE NSW (TAFE Library Services) on 01 May 2017 (Document currency not guaranteed when printed)

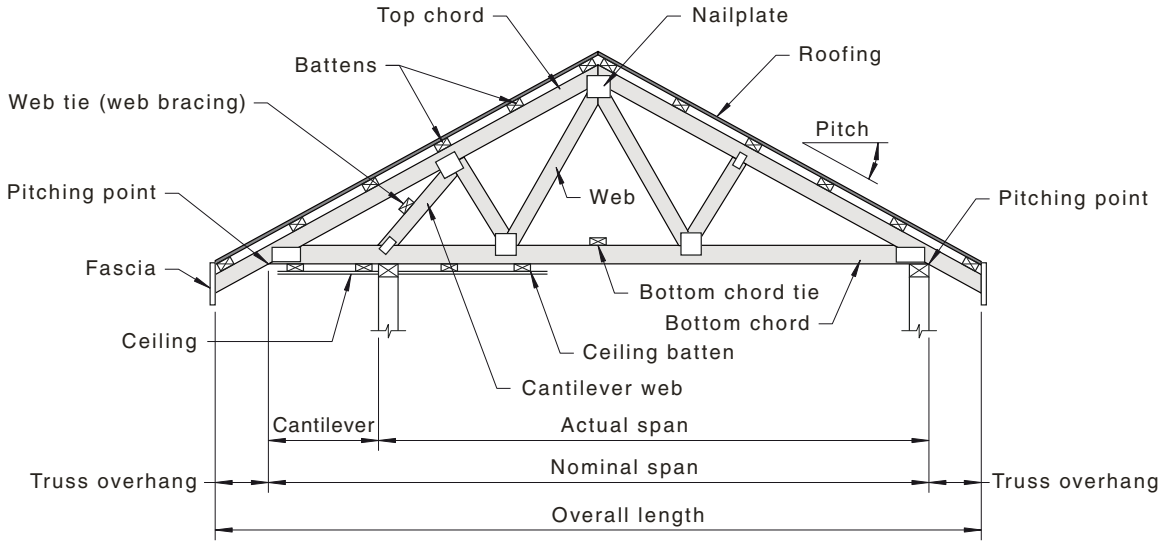

(a) Timber trusses—general

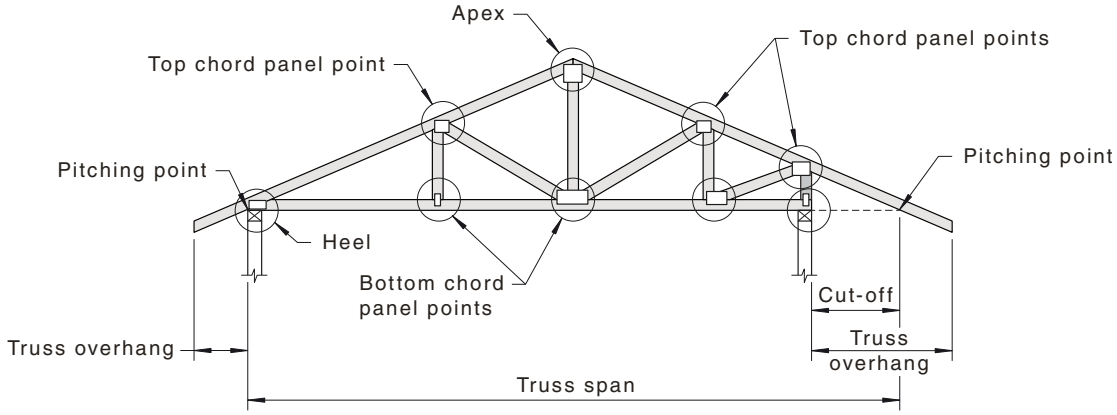

(b) Cut-off trusses and panel points

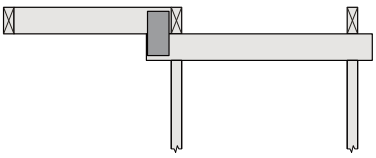

(c) Z-Sprocket

FIGURE A1 (in part) ROOF TRUSS AND SYSTEM TERMINOLOGY

Accessed by TAFE NSW (TAFE Library Services) on 01 May 2017 (Document currency not guaranteed when printed)

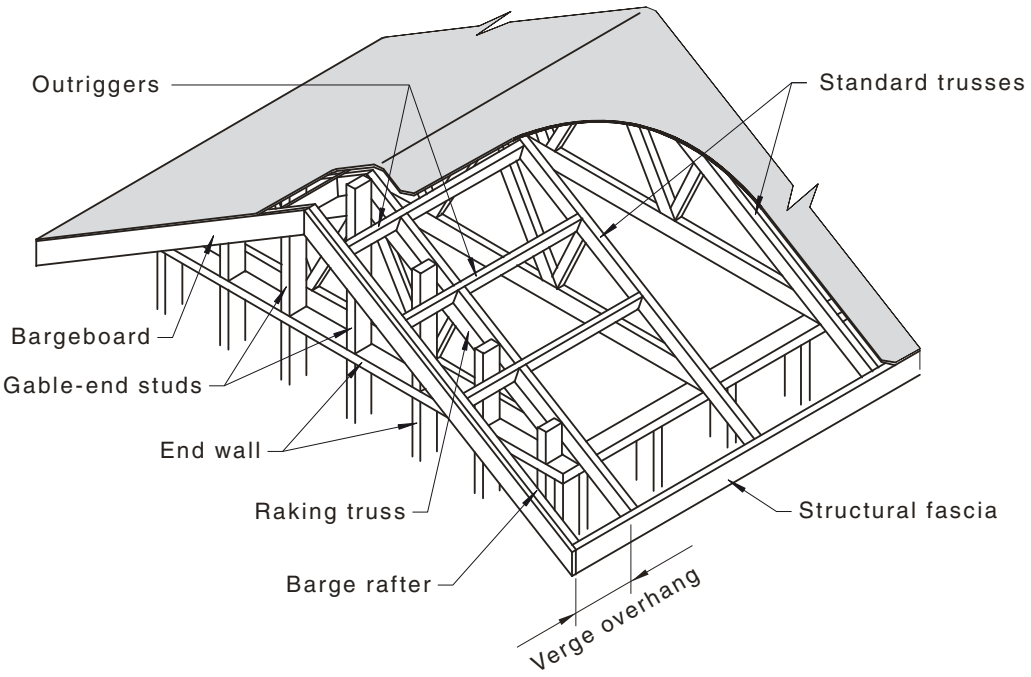

(d) Roof truss system—gable end

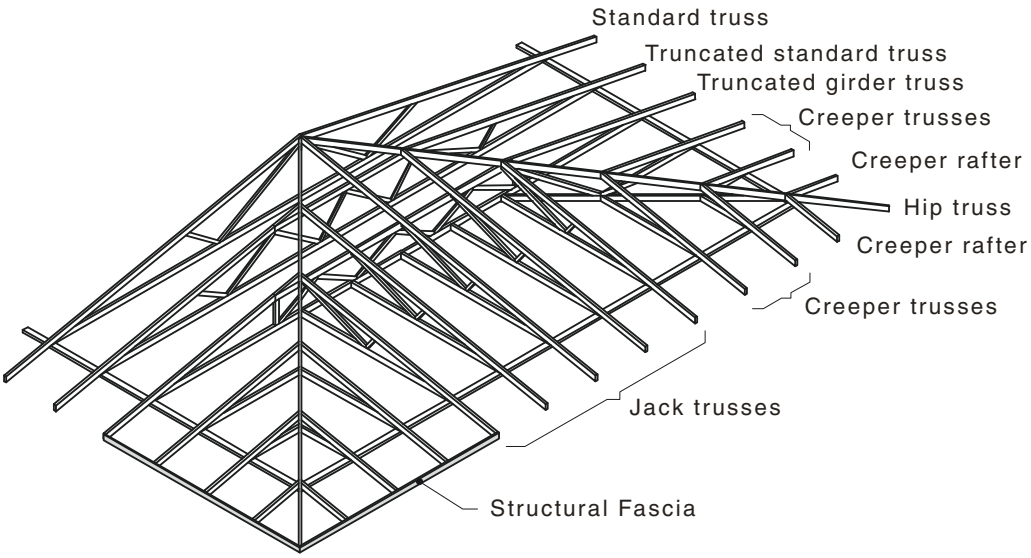

(e) Roof truss system—hip end

FIGURE A1 (in part) ROOF TRUSS AND SYSTEM TERMINOLOGY

Accessed by TAFE NSW (TAFE Library Services) on 01 May 2017 (Document currency not guaranteed when printed)

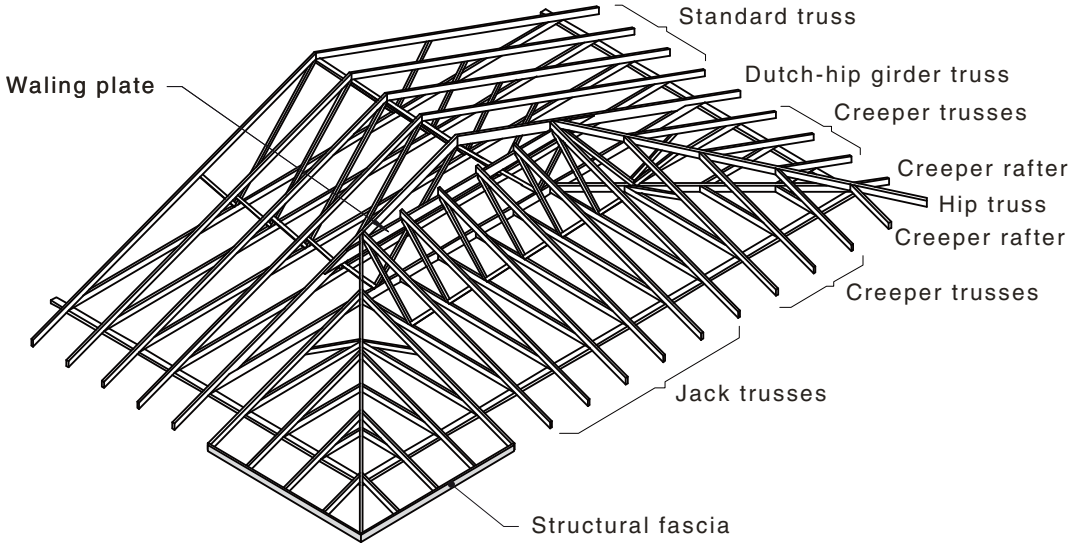

(f) Roof truss system—dutch-hip end

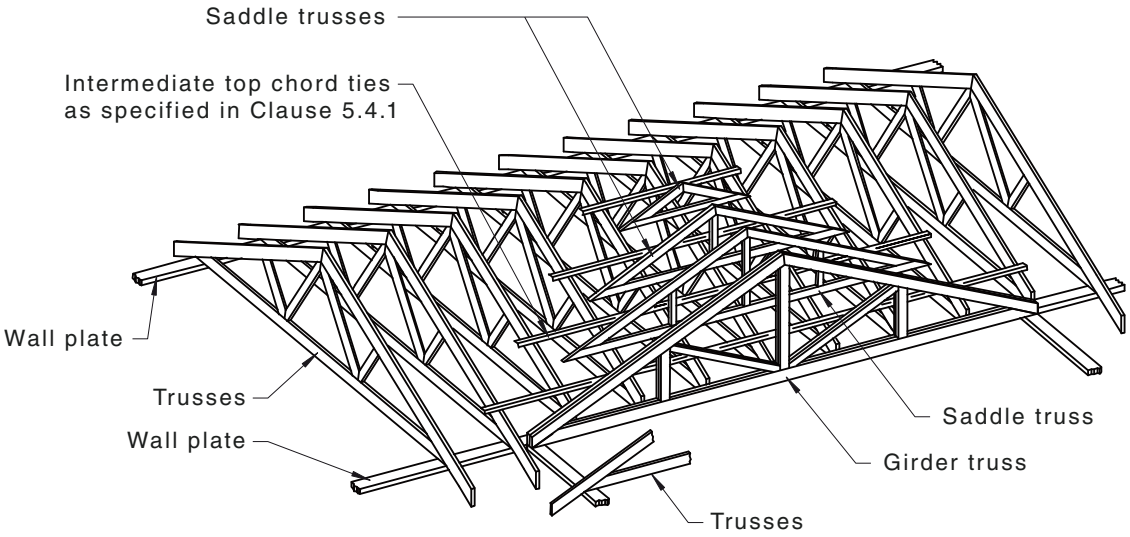

(g) Girder truss and saddle truss

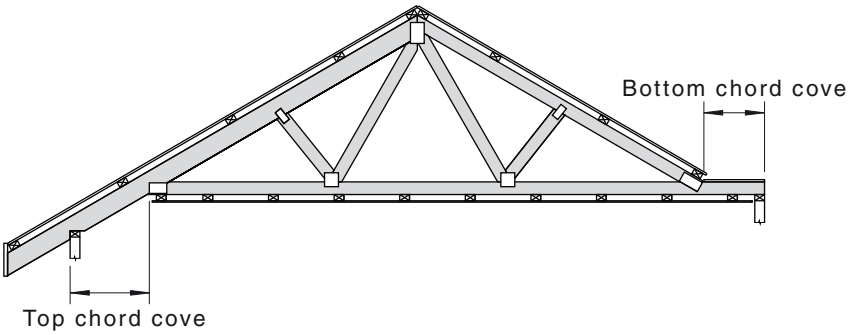

(h) Top and bottom chord coves

FIGURE A1 (in part) ROOF TRUSS AND SYSTEM TERMINOLOGY

Accessed by TAFE NSW (TAFE Library Services) on 01 May 2017 (Document currency not guaranteed when printed)

A2 TYPICAL TRUSS SHAPES

Figure A2 shows typical truss shapes. The number and position of webs varies with truss size and loading.

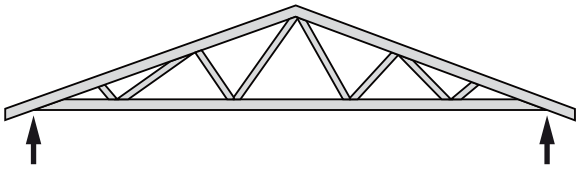

(a) Gable

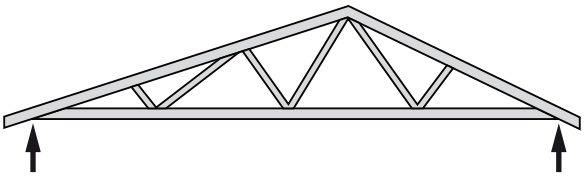

(b) Dual pitch/Offset ridge

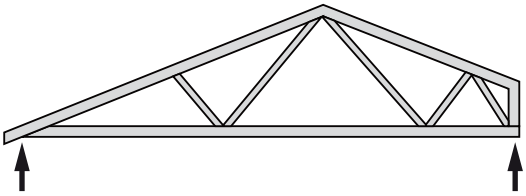

(c) Cut-off/Stub end

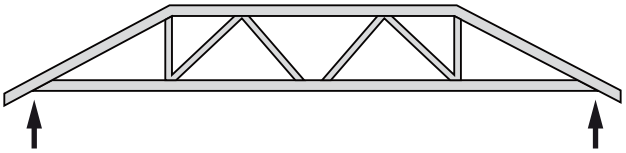

(d) Truncated

FIGURE A2 (in part) TYPICAL TRUSS SHAPES

Accessed by TAFE NSW (TAFE Library Services) on 01 May 2017 (Document currency not guaranteed when printed)

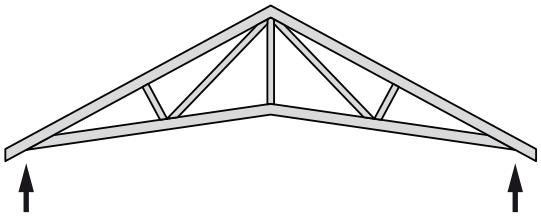

(e) Scissor

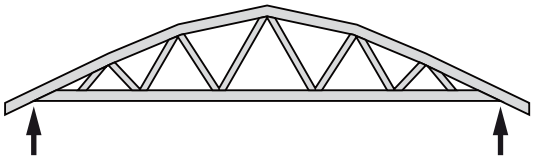

(f) Bowstring

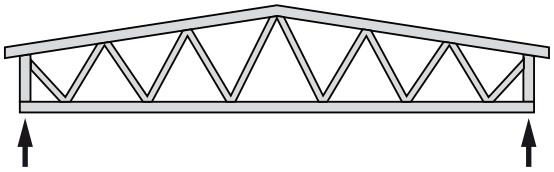

(g) Pitched warren

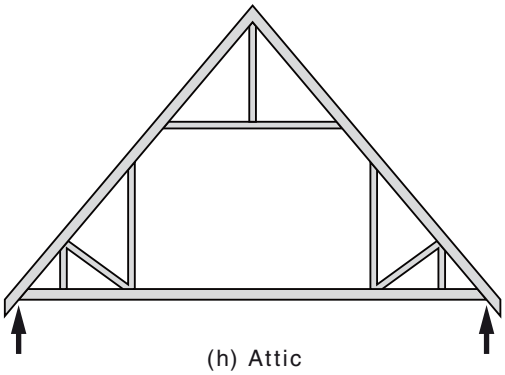

(h) Attic

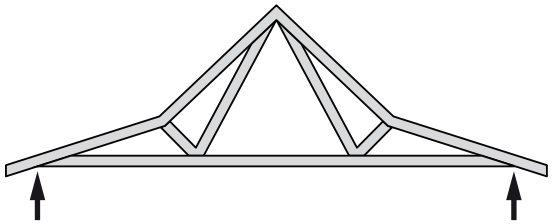

(i) Bell

FIGURE A2 (in part) TYPICAL TRUSS SHAPES

Accessed by TAFE NSW (TAFE Library Services) on 01 May 2017 (Document currency not guaranteed when printed)

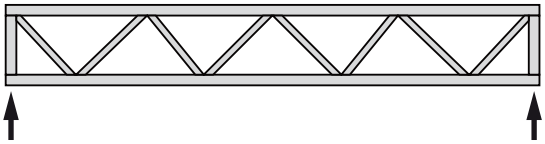

(j) Parallel chord

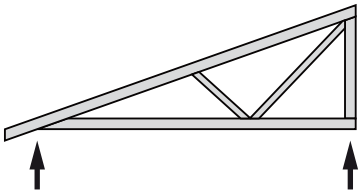

(k) Half/Mono

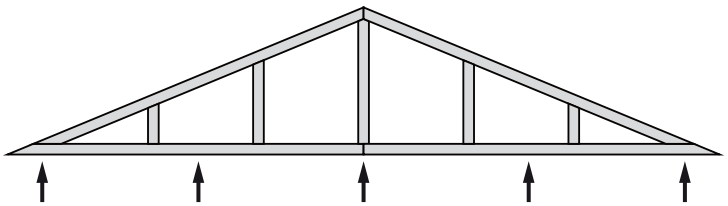

(l) Valley/Saddle

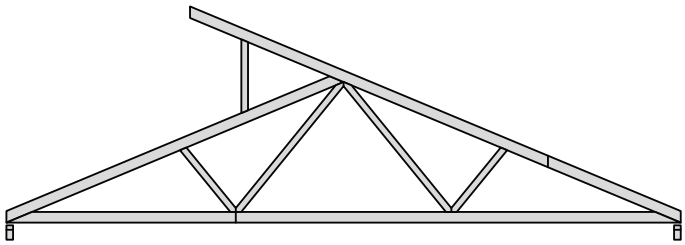

(m) Northlight/Skylight

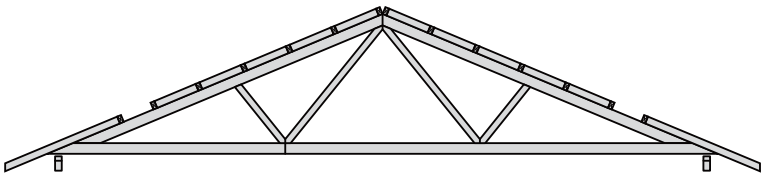

(n) Setdown

FIGURE A2 (in part) TYPICAL TRUSS SHAPES

Accessed by TAFE NSW (TAFE Library Services) on 01 May 2017 (Document currency not guaranteed when printed)

A3 KEY TRUSS TYPES—FUNCTION AND LOAD DESCRIPTIONS

The following generic function and load description information is indicative of the circumstances associated with some key truss types:

(a) *Standard truss* Typically, the permanent loads, distributed imposed loads, wind loads and snow loads are applied as uniformly distributed loads along each panel of each chord. If desired, these loads may be applied as point loads from the battens (or saddle trusses as appropriate) instead of a uniformly distributed load.

The concentrated imposed load is applied at the location producing the most severe effect.

(b) *Girder truss* Girder trusses support loads from other structural elements (e.g. trusses, beams) with these loads applied as point loads wherever they are fixed to the girder truss, commonly to the bottom chord.

A girder-girder truss is one girder truss supporting another.

(c) *Truncated truss* A truncated truss is a special form of standard truss insofar as the horizontal top chord receives loads from a hip end roof plane which may be at a different pitch to the other planes acting on the sloping top chords.

A truncated girder (TG) is a truncated truss with a specific set of girder truss loads. This truss is used in a hip end. It supports incoming hip trusses, jack trusses, hanging beams, rafters, etc. on one face and, in most instances, a half-standard truss loading on the other face.

All truncated trusses have different restraint spacing on the sloping top chord (batten spacing) versus the horizontal top chord (jack truss spacing).

(d) *Attic truss* Typically, an attic truss will have vertical webs forming the sidewalls of a room and a horizontal chord/web/collar tie forming the ceiling of the room. The bottom chord is loaded with the same loads as a floor joist.

Attic trusses are steeply pitched to form the habitable space. They are often too high for transporting so they may need to be divided into two parts for easier transport to the site. In these circumstances, the design will need to provide for this solution.

The shape of the enclosed space will dictate whether the vertical wall components are in compression or tension and this can have a significant effect on the bending forces induced into the top chords. It is of considerable benefit to the attic truss if an internal load-bearing wall can be utilized for support.

(e) *Gable end truss* A gable end truss forms a vertical gable at one end of a roof block. It may be free spanning or sit partially or wholly on the end wall. The latter configuration is strongly preferred. The primary loading characteristic of a gable end truss is that it supports the gable end overhang formed by outriggers (or Z-sprockets) or, occasionally, roof battens in the case of small overhangs.

Outriggers are straight rafters sitting on top of the gable end truss top chords. The truss top chords need to be set down to accommodate the outriggers. Such a configuration can produce significant design issues if the truss is also free spanning. Z-sprockets pass underneath the gable end truss top chord.

In both of the above situations, outriggers can induce considerable forces into the gable end truss itself so they need to be designed first. Typically, the back span of the outrigger will be at least equal to the overhang length and it will extend back to one or two of the adjacent standard trusses. It is not common practice for the outrigger reactions to be applied to the standard trusses as these reactions act to relieve the normal standard truss loads.

(f) *Wind truss* Wind trusses are most commonly used in commercial construction where bracing cross-walls are widely spaced and bracing efficacy in the plane of the ceiling is difficult to achieve.

Accessed by TAFE NSW (TAFE Library Services) on 01 May 2017 (Document currency not guaranteed when printed)

APPENDIX B

OTHER DESIGN CONSIDERATIONS

(Informative)

B1 BRACING AND CONNECTIONS

B1.1 Bracing

Bracing is an essential part of a roof truss system. It comprises temporary erection bracing and permanent structural bracing. Individual bracing components may be installed to act in one or both of these functions.

The basic guidelines for temporary bracing are described in AS 4440. Its primary function is to hold the erected trusses straight and true in position and in a safe and secure manner until the permanent battens, structural bracing and linings are installed. Although they may be removed after building completion, most temporary bracing components are usually left behind to also serve as permanent bracing.

The basic guidelines for permanent bracing are also described in AS 4440. Permanent bracing has a twofold function: first, to provide buckling restraints to individual truss members acting in compression, and second, to transfer external lateral forces acting on the structure to the bracing walls. Most bracing systems serve to act in both of these functions simultaneously.

There are three types of permanent bracing, namely roof bracing, web bracing and ceiling bracing, as follows:

(a) Roof bracing usually constitutes closely spaced roof battens and diagonal steel braces. This system transfers part of the external lateral forces acting on the roof to the bracing walls. The battens also provide buckling restraints to the truss top chords.

(b) Web bracing is specified when long slender webs under compression require buckling restraint. This is usually accomplished by attaching a binder to the affected web in a run of trusses and cross bracing the binder with steel brace at regular intervals. Alternatively, a timber or metal T-stiffener may be attached to the edge of a web to improve its out-of-plane stiffness.

(c) Ceiling bracing systems are much more varied and complex. The most common type is a battened or direct fixed plasterboard ceiling as described in the AS 1684 series. This refers to a full structural ceiling diaphragm that is positively attached to the truss bottom chord. It provides restraint to the bottom chord component and also transfers external lateral forces acting on the roof and wall to the side bracing walls.

    Where a ceiling lining is suspended, or attached to furring channels which are clipped onto the truss bottom chord, it provides neither bottom chord buckling restraint nor structural ceiling diaphragm action. In this instance, or for exposed trusses without a ceiling on the bottom chord, an alternative ceiling bracing system needs to be provided. Such a system is often broken into two separate parts: a bottom chord restraint system and a structural ceiling diaphragm.

    A bottom chord restraint system is usually achieved by a series of binders laid on top of the bottom chord at regular intervals supplemented by diagonal steel braces. It is normally acceptable for the truss design to replicate the diagonal steel brace layout for the roof on to the bottom chord for this purpose.

Accessed by TAFE NSW (TAFE Library Services) on 01 May 2017 (Document currency not guaranteed when printed)

However, a structural ceiling diaphragm is a specialized system that needs to be specifically designed to transmit lateral loads to bracing walls. It requires the calculation of external lateral loads on the structure and the design of components to transfer these loads to the bracing walls. One example of this system is the use of horizontal wind trusses that span between bracing walls. They may be located against and tied to all external walls to pick up lateral loads on the building or they may rely on binders tied to external walls. They also need to be connected to bracing walls to offload the external lateral forces. Wind trusses are usually supported off roof trusses to ensure they do not sag under gravity.

The building specification should clearly allocate responsibility for these designs and not assume they will always be provided by the truss manufacturer.

B1.2 Connections

Truss-to-truss and truss-to-support connection details are a normal part of the design of a roof truss system and the specification of these connections should appear in the installation documentation. The connectors are also normally supplied and delivered on site along with the trusses.

On some occasions, by necessity, the truss-to-support connections are designed and supplied by a third party, such as when the trusses are supported by masonry block walls which require a different range of tie down connectors not supplied by the truss manufacturer. In these situations, documentation of the truss reactions should be made available on request.

B2 ERECTION AND HANDLING FORCES

The truss design does not need to specifically allow for forces arising from handling prior to final installation or construction loads prior to the truss being fully secured and braced on site. However, it is acknowledged that trusses are vulnerable to un-designed forces during handling in the truss plant, during assembly, transport and on site during erection. Procedures should therefore be in place to minimize the potential for damage. If any visible damage occurs, rectification that is compatible with the original truss design is required.

B3 SECONDARY STRESSES

Some trusses, particularly in NCC Building Class 2-9 applications, may be required to transfer additional wind or earthquake forces in their chords as part of the lateral resistance of the overall building. In these circumstances, any such forces should be indicated and the truss design should include consideration of them.

Where wind acts on a gable end, the gable end truss may be subject to out-of-plane bending. Wall cladding should be fixed to separate jack studs located outside of the gable end truss and not directly to the gable end truss. If this is not practical, the truss web design should allow for out-of-plane bending and/or additional horizontal beams should be added to the inside face of the truss to transfer a significant portion of the wind force to the supporting structure. Alternatively, or additionally, a roof/ceiling diaphragm can be used to transfer these loads.

As the scale of the building increases, out-of-plane actions on roof trusses, such as those that may arise from wind bracing or lateral restraint systems, are likely to become increasingly relevant to the strength limit states design for the truss members and, subject to the specific circumstances, additional attention may be required to address this matter.

Accessed by TAFE NSW (TAFE Library Services) on 01 May 2017 (Document currency not guaranteed when printed)

B4 MOISTURE CONTROL IN ROOF SPACES

Nailplated timber trusses have been used successfully in Australia for over 50 years. In recent years, however, research has indicated that improved control of moisture content in the roof space is desirable, first to reduce 'mechano-sorptive' effects whereby there may be a gradual loss of nailplate tooth penetration into timber due to significant fluctuations of moisture content over the design life of the building, and second, to reduce the potential effects of damage caused by water infiltration into the roof space during high wind events. This research has shown that the type of roof structure and roofing material influences the likelihood and severity of damage occurring and that concrete tiled roofs are likely to be the most vulnerable to this moisture ingress. The research also finds that the installation of full sarking particularly underneath tiled roofs, has a significant effect on reducing moisture content fluctuations.

For the same reasons, shower and cooking vents should extract moist air directly to the exterior of the building.

NOTES:

1 The NCC requires that buildings be constructed to provide resistance to moisture from the outside.

2 Further information may be obtained from the following:

(a) Report TR55, *Investigation of Performance of Housing in Brisbane Following Storms on 16 and 19 November 2008*, Cyclone Testing Station, James Cook University (see also Appendix B6).

(b) Project Report PNB036-0607, *Mechano-Sorptive Nailplate Backout in Nailplated Timber Trusses*, Forest and Wood Products Australia Limited.

(c) Information Handbook, *Condensation in Buildings*, ABCB.

B5 DURABILITY

The structure and its structural elements, including timber, metal, adhesives and any other structural material, should be designed and any assumed maintenance program specified in order to satisfy strength, stability and serviceability requirements for the design life of the structure. Due consideration should be given to environmental conditions such as the effect of any thermal, physical, chemical, mechanical and biological agents that may act on the structure to reduce its performance characteristics.

Nailplated trusses should not be left exposed to rain for prolonged periods of time.

NOTES:

1 Any sign of nailplate backout due to repeated wetting and drying, and consequent swelling and shrinking of the truss timber, should be remedial. Under such conditions the capacity of the nailplates at joints can be significantly compromised.

2 Further information may be obtained from the following:

(a) Technical Design Guide #05: *Timber Service Life Design—Design Guide for Durability*, Wood Solutions, Forest and Wood Products Australia Limited.

(b) Project Report PNB036-0607, *Mechano-Sorptive Nailplate Backout in Nailplated Timber Trusses*, Forest and Wood Products Australia Limited.

B6 EXPOSURE TO CORROSION

The majority of truss components are manufactured from Z275 galvanized steel sheets. Stainless steel grade 316 components are also available for use in aggressive environments. Heavy metal components and fasteners are usually hot dip galvanized or electro-galvanized.

Accessed by TAFE NSW (TAFE Library Services) on 01 May 2017 (Document currency not guaranteed when printed)

The recommended level of protection depends on the potential exposure to moisture and any aggressive airborne chemicals or, in some cases, chemicals such as copper used in some timber treatments. The main variables are the building location or zone and its proximity to the coastline or source of chemical hazards, and the risk of exposure to these elements depending on the component's location within the building.

The following needs to be taken in to account:

(a) Definition of building zones:

(i) *Sea spray zone* A severe marine environment situated less than 1 km from a surf coastline or less than 100m from a sheltered bay not subjected to breaking surf.

(ii) *Coastal zone* A marine environment situated between 1 km and 10 km from a surf coastline or between 100 m and 1 km from a sheltered bay not subjected to breaking surf.

(iii) *Industrial zone* An environment situated within 100 m heavy industrial complexes where corrosive gases may be emitted and come into contact with exposed components.

(iv) *Hazardous zone* An environment within a building housing hazardous chemicals that may affect the durability of components used in the structure. Examples include enclosed swimming pools where airborne chloramines may cause rapid deterioration of metal components, chemical storage buildings and buildings that house animals. These need specific consideration that is beyond the scope of this Standard.

(v) *Low hazard zone* A normal environment not described by any of the above situations.

(b) Definition of exposure condition:

(i) *Closed* An internal environment within a building envelope that is essentially non-ventilated or effectively sealed and kept permanently dry [see Figure B1(a)].

(ii) *Sheltered* An environment within a building envelope which is under cover but not walled in, and where the components are not affected by direct or wind-blown rain to be repeatedly wetted, but is sufficiently ventilated to be subjected to airborne corrosive salts [see Figure B1(b)].

(iii) *Exposed* An external environment outside a building envelope that is exposed to weather or repeated wetting [see Figure B1(c)].

(c) Recommended corrosion protection:

The recommended minimum level of corrosion protection for steel components may be determined from Table B6 based on the building zones and exposure conditions defined in Items (a) and (b) above.

Accessed by TAFE NSW (TAFE Library Services) on 01 May 2017 (Document currency not guaranteed when printed)

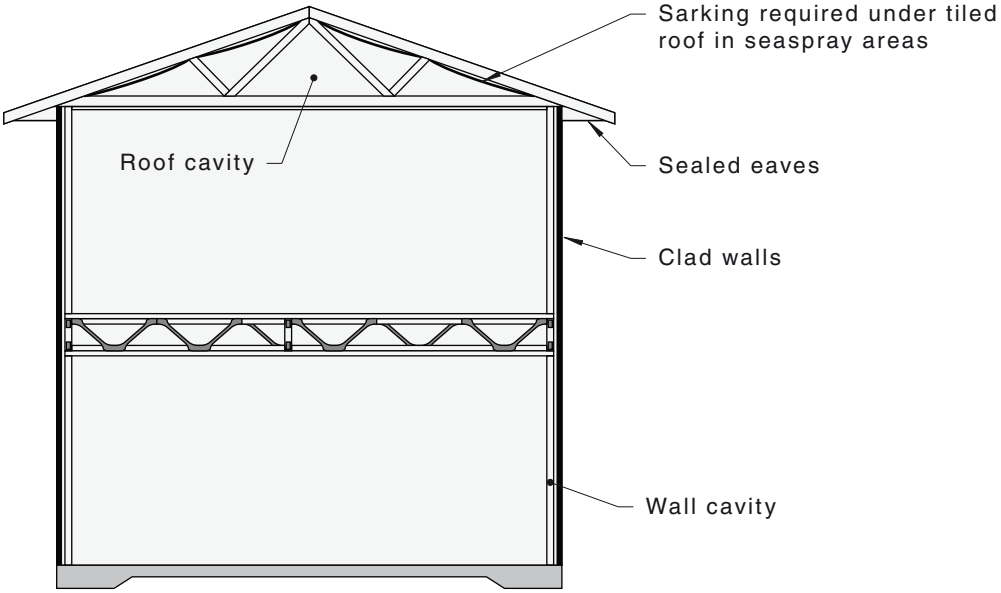

(a) Closed exposure condition

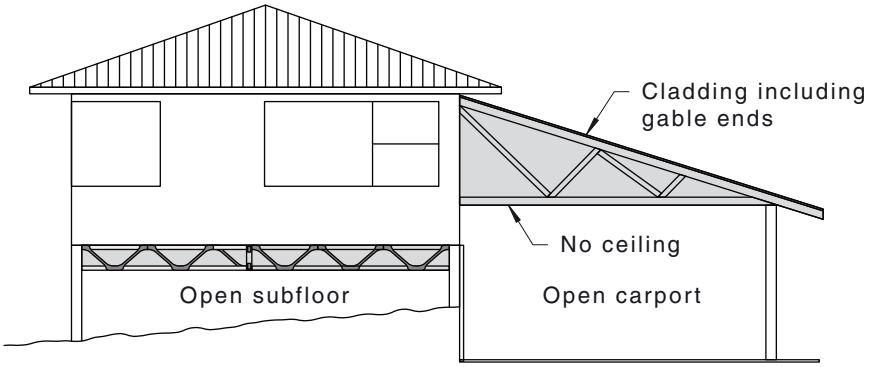

(b) Sheltered exposure condition

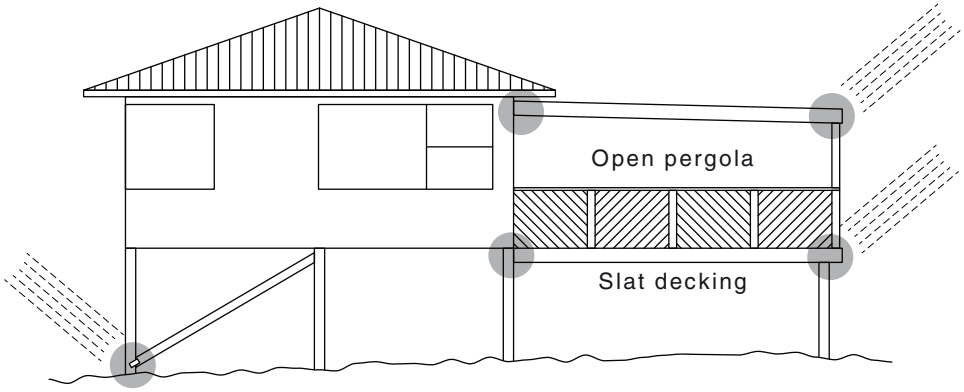

(c) Exposed exposure condition

FIGURE B1 EXPOSURE CONDITION EXAMPLES

Accessed by TAFE NSW (TAFE Library Services) on 01 May 2017 (Document currency not guaranteed when printed)

TABLE B1
RECOMMENDED CORROSION PROTECTION

Building zone	Exposure condition	Minimum corrosion protection
Sea spray	Closed	Galvanized Z275 or equivalent
	Sheltered	Stainless Steel Grade 316 or equivalent
	Exposed	Stainless Steel Grade 316 or equivalent
Coastal	Closed	Galvanized Z275 or equivalent
	Sheltered	Galvanized Z275 with additional suitable coating protection or Stainless Steel Grade 316 or equivalent
	Exposed	Hot dipped galvanized 600+gsm or stainless steel Grade 316 or equivalent
Industrial	Closed	Galvanized Z275 sheet steel or equivalent or nominal 5µm electro-galvanizing on heavy metal components and fasteners
	Sheltered	Galvanized Z275 with additional suitable coating protection or stainless steel Grade 316 or equivalent
	Exposed	Hot dipped galvanized 600+gsm or stainless steel Grade 316 or equivalent
Hazardous	Closed	Refer to corrosion specialist for protection requirements appropriate to hazard conditions
	Sheltered	
	Exposed	
Low hazard	Closed	Galvanized Z275 sheet steel or equivalent or nominal 5µm electro-galvanizing on heavy metal components and fasteners
	Sheltered	Galvanized Z275 or equivalent
	Exposed	Hot dipped galvanized 300+gsm or stainless steel Grade 316 or equivalent

NOTE: Further information is provided in Technical Design Guide #05: *Timber Service Life Design—Design Guide for Durability*, Wood Solutions, Forest and Wood Products Australia Limited.

B7 TRUSS INSTALLATION

Documentation for connectors, tie-downs and bracing to be supplied to site (see Clause 2.3.1). Supervision and/or inspection is recommended to verify that the installation of the truss system is as specified in the installation documentation. The method of achieving this is not specified; however, a checklist, such as the supervisor's checklist 'Handling/Installation/Inspection of Roof Framing' given in Regulation 74 of the Government of South Australia's *Development Regulations 2008*, may be useful.

Accessed by TAFE NSW (TAFE Library Services) on 01 May 2017 (Document currency not guaranteed when printed)

The warning label described in Clauses 2.3.2 and 2.3.3 should also be of adequate size for visibility and be attached to a truss in a prominent location such as adjacent to the access manhole. An example of the label is shown below.

STAPLE HERE

IMPORTANT TRUSS INFORMATION

The roof trusses in this building have not been designed to support any additional loads such as water heaters, air conditioners or household storage unless marked accordingly.

The roof trusses have been designed to support light loads from occasional access for maintenance.

Unless prior approval is obtained from the manufacturer or an engineer:

- **DO NOT** use the roof space for storage or install any permanent load on or in the roof which weighs more than 15 kg (in total) to any truss.
- **DO NOT** cut or modify the trusses in any way.

FIGURE B2 EXAMPLE OF TRUSS APPLICATION WARNING LABEL

Accessed by TAFE NSW (TAFE Library Services) on 01 May 2017 (Document currency not guaranteed when printed)

APPENDIX C

COMMONLY USED STRUCTURAL MODELS

(Informative)

C1 MODEL GUIDELINES

The following model guidelines are commonly used for the strength design of timber trusses; in general, all analogues for truss members should remain within the depth of the member:

(a) *Centreline model*:

(i) *Chords* The primary structural analogue follows the centreline of the chords. At heel joints, an appropriate structural model of the joint can be made to correctly locate the chord centreline intersection over the support point. Such a joint model will require additional fictitious members to simulate the rotational stiffness of the joint.

Where two chords are lapped, the chord centrelines remain up to the lap, with additional fictitious members and joints introduced to reflect the rigidities provided by the connecting nailplates.

(ii) *Webs* In general, webs meeting at a joint will be represented by a single joint on the centreline of the chord(s). This joint is located as close as practical to the midpoint of the web/chord interface. If any web is close to another joint, but not held by the same nailplate, a separate joint will need to be created.

It is inevitable that, due to normal truss construction, web modelling will not follow the centreline of the web exactly. The effects of these out-of-line web models can be ignored for normal cases (i.e. if the analogue line remains within the boundaries of the physical web).

(b) *Joint modelling* Typically, structural line intersections are formed at a single point for each joint. End fixities are chosen appropriately although it is common to consider discontinuous members as pinned and continuous members as fixed. However, with computer software advances, it is possible to model the effect of the joint both for timber size effects and/or to replicate the nailplate effect on the joint by introducing fictitious members.

Heel joints will generally need to be modelled with a number of fictitious members to reflect the rotational stiffness of the joint.

When a truss is supported at the heel, or when there is a small cantilever where any part of the support is within the region of the heel cut, a suitable multi-joint heel analogue model such as that shown in Figure C1 may be used to determine forces. The bottom chord analogue member is pinned to the top chord analogue member. The vertical fictitious member is pinned both ends and has the properties of a 90 mm wide stress grade F5 timber member of the same thickness as the truss.

A single-joint heel analogue is acceptable when a truss is fully cantilevered or coved, and is not supported at the heel.

Where additional members such as sliders are added at a heel joint to cope with small cantilevers, raised heels and the like, additional analogue lines and joints will be needed and these extra joints should be located where nailplates are used to join the members together.

Accessed by TAFE NSW (TAFE Library Services) on 01 May 2017 (Document currency not guaranteed when printed)

(c) *Analogue hierarchy* Chord centrelines need to be constructed first, then heel joints and pitch break joints, then web joints from largest to smallest number of members. All other joints may be constructed in any order.

(d) *Structural analysis methods* Although there are several possible methods of analysis, the stiffness matrix approach is well suited to the analysis of trusses. Nailplates are not commonly used to transfer bending moments, but if assumed to do so, the nailplates should be designed accordingly.

Webs are assumed pinned at each end for analysis purposes unless the nailplates are designed to contribute to the joint stiffness.

If a member has a large depth relative to the panel length, the effect of the joint should also be taken into account. This is seldom required except at heel and knee joints.

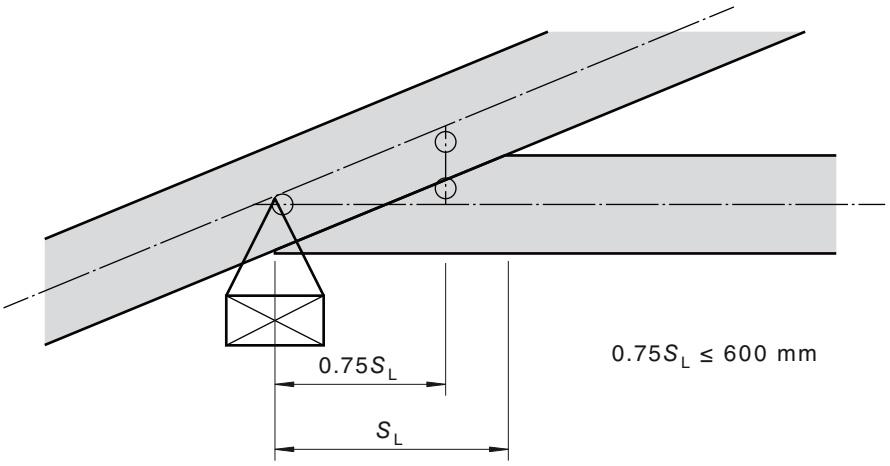

FIGURE C1 MULTI-JOINT HEEL ANALOGUE MODEL

C2 SUPPORT MODELS

A trussed roof structure is an interlocking grid system of trusses and battens with complex load sharing and load distribution mechanisms. For truss roofs of traditional style, it is common practice to design each truss or truss member individually without further load redistribution due to displacement of other interlocking or adjacent elements.

The following practices are, however, commonly used in the modelling of truss bearing supports:

(a) *Pinned and roller supports* It is normal practice for only one support in a truss to be considered pinned to resist lateral and vertical loads. All other supports are normally considered as horizontal rollers resisting only vertical forces. Having more than one horizontal support creates an arching action that is usually not justifiable unless the supports and connections are specifically designed to resist this action.

(b) *Spring supports* The use of spring supports is encouraged to more accurately determine the distribution of loads, especially when a truss has more than two supports (e.g. a jack truss supported by a wall at the heel and at the top and bottom chords of a hip girder or truncated girder).

Accessed by TAFE NSW (TAFE Library Services) on 01 May 2017 (Document currency not guaranteed when printed)

APPENDIX D

TRUSS OVERHANG DESIGN METHOD

(Normative)

D1 GENERAL

Truss overhangs are sometimes birdsmouth-notched at their lower support point so as to provide bearing to a wall and to permit an overhang.

The design method in this Appendix, which differs from that given for notches in AS 1720.1, applies for notches to a maximum depth of one-third of the truss overhang depth (see Figure D1).

The design method in this Appendix allows for the load sharing effect obtained when truss overhangs are attached to a structural fascia.

NOTES:

1 For truss overhangs that comprise multiple truss plies, all plies can contribute to the stiffness and strength of the overhang. Scabs can also contribute to the strength and stiffness of the overhang, provided they extend sufficiently far back into the main span of the truss and are appropriately fixed to the truss.

2 Special consideration may be required for fascias that are of lower rigidity and/or have a less effective connection than a directly nailed structural fascia, such as with a typical steel fascia. The effective stiffness of contributing battens may be utilized for this purpose.

D2 EFFECT OF BIRDSMOUTH NOTCH ON RIGIDITY

In determining the deflection of the overhanging portion of a birdsmouth-notched truss overhang, the rigidity of the truss overhang shall be taken as $g_{47}\,E_r\,I_r$, where g_{47} is a birdsmouth geometry factor that accounts for reduced rigidity due to the birdsmouth notch and $(E_r\,I_r)$ is the rigidity of the un-notched truss overhang.

The birdsmouth geometry factor is bounded by the range $0.25 \le g_{47} \le 1.0$ and in this range is given by the following equation:

$$g_{47} = 1 - \left(5.7\,\frac{d_{notch}}{L_o}\right) \qquad \text{. . . D2}$$

where

d_{notch} = depth of the birdsmouth notch, in millimetres (see Figure D1)

L_o = horizontal span of the overhang, in millimetres

Accessed by TAFE NSW (TAFE Library Services) on 01 May 2017 (Document currency not guaranteed when printed)

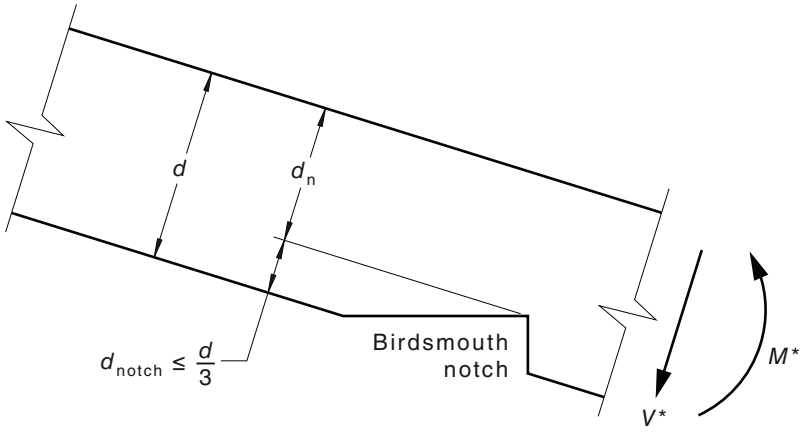

FIGURE D1 NOTATION AND SIGN CONVENTION

D3 LOAD SHARING FOR PARALLEL OVERHANGS

In the determination of the strength and serviceability limit states, concentrated and partial area actions (P^* and w^*) applied to overhangs shall be assumed to be laterally distributed to adjacent overhangs such that the effective concentrated action (P^*_{eff}) or effective distributed action (w^*_{eff}) used for the design of an individual overhang is obtained as follows:

$$P^*_{eff} = g_{45}\, P^* \qquad \text{. . . D3(1)}$$

and

$$w^*_{eff} = g_{45}\, w^* \qquad \text{. . . D3(2)}$$

where

P^* = design concentrated action

w^* = design partial area action

g_{45} = the load distribution factor, which is bounded by the range $0.3 \le g_{45} \le 1.0$ and in this range is given by the following equation:

$$g_{45} = 0.2 \log_{10}\left(\frac{h_r}{h_f}\right) + 0.69 \qquad \text{. . . D3(3)}$$

where

$$h_r = g_{47}\,\frac{E_r I_r}{L_o^3} \qquad \text{. . . D3(4)}$$

$$h_f = \frac{E_f I_f}{S^3} \qquad \text{. . . D3(5)}$$

$g_{47}\, E_r\, I_r$ = flexural rigidity of the overhang

$E_f\, I_f$ = flexural rigidity of the fascia

L_o, S = horizontal span of overhang and spacing of trusses, respectively

Accessed by TAFE NSW (TAFE Library Services) on 01 May 2017 (Document currency not guaranteed when printed)

D4 OVERHANG STRENGTH AT BIRDSMOUTH NOTCH

The following applies:

(a) *Bending strength* The design capacity in bending (ϕM) at the birdsmouth notch, for the strength limit state, shall satisfy the following equation:

$$(\phi M) \geq M^* \qquad \text{. . . D4(1)}$$

where

$$(\phi M) = \phi\, k_1\, k_4\, k_6\, k_9\, (f'_b)\, Z_n \qquad \text{. . . D4(2)}$$

and

M^* = design action effect in bending for negative moment as defined in Figure D1

ϕ = capacity factor (see Clause 3.3)

k_1, k_4, k_6 = modification factors (see Clause 3.4.2)

k_9 = strength sharing modification factor for parallel overhangs rigidly connected to a fascia (see Appendix D1 Note 2)

$= 1.24 - 0.24 \left(\dfrac{S}{L_o}\right)$, but is not less than 1.0

f'_b = characteristic strength in bending

Z_n = net section modulus at notch

$= \left(\dfrac{bd_n^2}{6}\right)$

where

b = breadth

d_n = the depth of the overhang above the birdsmouth notch (see Figure D1) $\left(d_n \geq \dfrac{2d}{3}\right)$

(b) *Shear strength at birdsmouth notch* The design capacity in shear at the birdsmouth notch for the strength limit state shall satisfy the following equation:

$$\phi V \geq V^* \qquad \text{. . . D4(3)}$$

where

$$\phi V = \phi\, k_1\, k_4\, k_6\, (f'_s)\, A_s \qquad \text{. . . D4(4)}$$

and

V^* = design action effect in positive shear (see Figure D1)

ϕ = capacity factor (see Clause 3.3)

k_1, k_4, k_6 = modification factors (see Clause 3.4.2)

f'_s = characteristic strength in shear

A_s = $\dfrac{2}{3} bd_n$

Accessed by TAFE NSW (TAFE Library Services) on 01 May 2017 (Document currency not guaranteed when printed)

(c) *Combined bending and shear (fracture strength) at the birdsmouth notch* For a truss overhang of depth d, birdsmouth-notched to a maximum depth of one third of its depth, as shown in Figure D1, the maximum bending moment action effect (M^*) and nominal maximum shear force action effect (V^*), calculated for the net section, shall comply with the following interaction equation:

$$\frac{6M^*}{bd_n^2} + \frac{6V^*}{bd_n} \leq \phi\, g_{50}\, k_1\, k_4\, k_6\, f'_{sj} \qquad \text{. . . D4(5)}$$

where

b = breadth of the truss overhang

d_n = net depth of truss overhang above the notch

ϕ = capacity factor (see Clause 3.3)

k_1, k_4, k_6 = modification factors (see Clause 3.4.2)

f'_{sj} = characteristic shear strength at joint details

g_{50} = coefficient for birdsmouth notch

$$= \frac{18}{\left(d^{0.333}\right)}$$

If, according to the sign convention shown in Figure D1, M^* is negative, it may be taken as zero in the application of Equation D4(5). Similarly, if V^* is positive, it may also be taken as zero in the application of Equation D4(5).

Accessed by TAFE NSW (TAFE Library Services) on 01 May 2017 (Document currency not guaranteed when printed)

BIBLIOGRAPHY

ANSI/TPI
1 National design standard for metal plate connected wood truss construction

TPIC
TPIC Truss design procedures and specifications for light metal plate connected wood trusses

NCC
National Construction Code

Information Handbook: *Condensation in Buildings*, ABCB, 2011

Project Report PNB036-0607, *Mechano-Sorptive Nailplate Backout in Nailplated Timber Trusses*, Forest and Wood Products Australia, 2009

Regulation 74, *Development Regulations 2008, Government of South Australia*

Report TR55, *Investigation of Performance of Housing in Brisbane Following Storms on 16 and 19 November 2008*, Cyclone Testing Station, James Cook University, 2009

Technical Design Guide #05: *Timber Service Life Design—Design Guide For Durability*, Wood Solutions, Forest and Wood Products Australia Limited

Accessed by TAFE NSW (TAFE Library Services) on 01 May 2017 (Document currency not guaranteed when printed)

NOTES

Accessed by TAFE NSW (TAFE Library Services) on 01 May 2017 (Document currency not guaranteed when printed)

NOTES

Accessed by TAFE NSW (TAFE Library Services) on 01 May 2017 (Document currency not guaranteed when printed)

NOTES

Accessed by TAFE NSW (TAFE Library Services) on 01 May 2017 (Document currency not guaranteed when printed)

Standards Australia

Standards Australia develops Australian Standards® and other documents of public benefit and national interest. These Standards are developed through an open process of consultation and consensus, in which all interested parties are invited to participate. Through a Memorandum of Understanding with the Commonwealth Government, Standards Australia is recognized as Australia's peak non-government national standards body.

For further information visit www.standards.org.au

Australian Standards®

Committees of experts from industry, governments, consumers and other relevant sectors prepare Australian Standards. The requirements or recommendations contained in published Standards are a consensus of the views of representative interests and also take account of comments received from other sources. They reflect the latest scientific and industry experience. Australian Standards are kept under continuous review after publication and are updated regularly to take account of changing technology.

International Involvement

Standards Australia is responsible for ensuring the Australian viewpoint is considered in the formulation of International Standards and that the latest international experience is incorporated in national Standards. This role is vital in assisting local industry to compete in international markets. Standards Australia represents Australia at both the International Organization for Standardization (ISO) and the International Electrotechnical Commission (IEC).

Sales and Distribution

Australian Standards®, Handbooks and other documents developed by Standards Australia are printed and distributed under licence by SAI Global Limited.

Accessed by TAFE NSW (TAFE Library Services) on 01 May 2017 (Document currency not guaranteed when printed)

Accessed by TAFE NSW (TAFE Library Services) on 01 May 2017 (Document currency not guaranteed when printed)

For information regarding the development of Standards contact:
Standards Australia Limited
GPO Box 476
Sydney NSW 2001
Phone: 02 9237 6000
Fax: 02 9237 6010
Email: mail@standards.org.au
Internet: www.standards.org.au

For information regarding the sale and distribution of Standards contact:
SAI Global Limited
Phone: 13 12 42
Fax: 1300 65 49 49
Email: sales@saiglobal.com

ISBN 978 1 76035 200 4

This page has been left intentionally blank.

Accessed by TAFE NSW (TAFE Library Services) on 01 May 2017 (Document currency not guaranteed when printed)